Minute Book Text Detail
Book 0216 Page 1 OPENING FOR APRIL 5, 2021
Date 4/ 5/2021 AGENDA FOR APRIL 5, 2021

APRIL 5, 2021

The Board of Supervisors met at 9:00 a.m. the 5th day of April, 2021, in the Supervisors Board Room, in the Pearl River County Courthouse Complex in the City of Poplarville, Mississippi, with the following members of said Board and officers of said County were present to-wit:

President, Sandy Kane Smith, member from District Five;
Vice President, Malcolm Perry, member from District Two;
Donald Hart, member from District One;
Hudson Holliday, member from District Three;
County Administrator, Adrain Lumpkin, Jr.;
Board Attorney, Joe Montgomery;
Chancery Deputy Clerk, Kalyn Davis, representing Chancery Clerk;
Sheriff, David Allison;
Road Manager, Charlie Schielder,
Emergency Management Director, Danny Manley;
County Engineer, Les Dungan.

The following proceedings were had and entered of record to-wit:

Pearl River County
Board of Supervisors
Meeting Agenda
April 5, 2021

Welcome & Call to Order 9:00 A.M.

01) Consider approving Board Minutes – March, 2021
02) Consider approving Claims Docket for April 5, 2021
03) Sheriff Agenda Items:
- A. Personnel
- B. Requesting issuance of check for clothing allowance
- C. Final Default Judgments
- D. Consider purchase of mobile radios from Comsouth off State Contract
- E. Issue P.O. and payment from Drug Forfeiture (2021 Dodge) per State Contract
- F. Authorize to issue P.O. for (6) Dodge Durango's per State Contract
- G. Authorize to issue P.O. for (3) Dodge 1500 Crew Cab Trucks per State Contract
- H. Authorize to issue P.O. for (1) Chrysler Voyager L per State Contract
- I. Authorize President to execute DUI Grant for 2021-2022
- J. Authorize President to execute Occupant Protection Grant for 2021-2022

04) County Engineer: Update
05) Road Department Agenda Items:
- A. Personnel
- B. Consider approving 4 year Road Plan

06) Coroner Agenda Items:
- A. Request to appoint PRC Coroner Pro Tempore for Hancock County Coroner Duties
- B. Request to declare (2) Paupers and assist in cremation

07) Chancery Clerk Agenda Items:
- A. Personnel
- B. Annual Financial Report

08) Circuit Clerk Agenda Items:
- A. Accept 2020 AFR and authorize to issue PERS contribution
- B. Circuit Court Order Appointing and Setting Salary for Official Court Reporter

09) Chiller System emergency purchase quotes for the Health Department
10) Approve all required Resolutions necessary to refinance the Annex Bond and authorize President to execute all documents

Pearl River County
Board of Supervisors
Meeting Agenda
April 5, 2021

11) Personnel Consent Agenda Items:

A. Central Dispatch - Resignation
B. Economic Development Director - Resign
C. Economic Development Director - Hire

12) Consent Agenda Items:

A. Proclamation declaring April, 2021 as Sexual Assault Awareness Month
B. Approve restructuring the Nicholson Fire Truck financing terms
C. Private Road Name – SWEET HOME LN
D. LPRVF Grant Agreement for Crossroads Volunteer Fire Department
E. Letters of Notice to PRC Hospital & Nursing Home Re: Fuel and Water
F. Pearl River County Fair Committee additions
G. Notice of Amendment to Marion County, MS, Solid Waste Management Plan
H. Accept financing quotes and authorize lowest quote – Four (4) Ford ¾ Ton Trucks

13) Travel:

A. County/Youth Court (6) to Training in Oxford, MS on April 12-13, 2021
B. Central Dispatch (2) to Training in Pearl, MS on May 10-14, 2021
C. Chancery Clerk to Conference in Jackson, MS on April 7-9, 2021
D. Chancery Clerk to Workshop in Jackson, MS on April 21-22, 2021
E. County Officials to MAS Annual Convention in Biloxi, MS on June 14-17, 2021
F. County Administrator to Workshop in Jackson, MS on April 21-22, 2021
G. Veteran's Service Officer to event in Biloxi/Gulfport, MS on April 29, 2021
H. SO (2) to Accident Reconstruction in DeSoto, MS on April 12-23, 2021
I. SO (1) to Training Academy in Gulfport, MS on May 17-21, 2021
J. SO (2) to Handgun/Shotgun Instructor in Columbia, MS on April 26-30, 2021
K. (3) to Floodplain Managers Conference in Natchez, MS on May 3-5, 2021

NEXT BOARD MEETING – Wednesday, April 21st

Minute Book Text Detail
Book 0216 Page 4 BOARD MINUTES FOR MARCH, 2021
Date 4/ 5/2021 CLAIMS DOCKET FOR APRIL 5, 2021

ORDER TO APPROVE MARCH, 2021 BOARD MINUTES

There came on this day to be considered by the Board of Supervisors of Pearl River County, Mississippi, the matter to approve Board Minutes.

Upon motion made by Malcolm Perry and seconded by Jason Spence, the following order was adopted, to-wit:

Be It Ordered by the Pearl River County Board of Supervisors to approve March, 2021 Board Minutes.

Ordered and adopted, this the 5th day of April, 2021.

Voting AYE: Donald Hart, Malcolm Perry, Hudson Holliday, Jason Spence, and Sandy Kane Smith
Voting NAY: None

ORDER TO APPROVE CLAIMS DOCKET FOR APRIL 5, 2021

There came on this day to be considered by the Board of Supervisors of Pearl River County, Mississippi, the matter to approve Claims Docket for April 5, 2021.

Upon motion made by Hudson Holliday and seconded by Jason Spence, the following order was adopted, to-wit:

Be It Ordered by the Pearl River County Board of Supervisors to approve Claims Docket for April 5, 2021. (See attached Summary of all Funds)

Ordered and adopted, this the 5th day of April, 2021.

Voting AYE: Donald Hart, Malcolm Perry, Hudson Holliday, Jason Spence, and Sandy Kane Smith
Voting NAY: None

Alpha Listing of Claims
Claims to be Released 04/10/2021

SUMMARY OF ALL FUNDS

FUND	1	Claims		to	1638	Checks	142	Total	412,599.28	Manual	Held	Total 412,599.28
FUND	7	Claims		to		Checks	2	Total	677.23	Manual	Held	Total 677.23
FUND	12	Claims		to		Checks	1	Total	210.00	Manual	Held	Total 210.00
FUND	15	Claims		to		Checks	2	Total	161,147.42	Manual	Held	Total 161,147.42
FUND	26	Claims		to		Checks	2	Total	6,823.26	Manual	Held	Total 6,823.26
FUND	45	Claims		to		Checks	1	Total	383.04	Manual	Held	Total 383.04
FUND	96	Claims		to	109	Checks	9	Total	5,867.81	Manual	Held	Total 5,867.81
FUND	97	Claims		to		Checks	8	Total	16,343.04	Manual	Held	Total 16,343.04
FUND	104	Claims		to		Checks	1	Total	251.85	Manual	Held	Total 251.85
FUND	156	Claims		to		Checks	55	Total	866,870.65	Manual	Held	Total 866,870.65
FUND	166	Claims		to		Checks	2	Total	708.59	Manual	Held	Total 708.59
FUND	206	Claims		to		Checks	8	Total	26,319.06	Manual	Held	Total 26,319.06
FUND	280	Claims		to		Checks	8	Total	29,824.27	Manual	Held	Total 29,824.27
FUND	410	Claims		to		Checks	2	Total	654.38	Manual	Held	Total 654.38
FUND	420	Claims		to	67	Checks	4	Total	1,737.96	Manual	Held	Total 1,737.96
FUND	450	Claims		to		Checks	5	Total	2,314.17	Manual	Held	Total 2,314.17
FUND	650	Claims	45	to	45	Checks	1	Total	8,375.75	Manual	Held	Total 8,375.75
FUND	656	Claims		to		Checks	6	Total	2,085.85	Manual	Held	Total 2,085.85
FUND	661	Claims		to	44	Checks	7	Total	4,233.37	Manual	Held	Total 4,233.37
FUND	662	Claims		to		Checks	2	Total	434.39	Manual	Held	Total 434.39
FUND	664	Claims		to	55	Checks	5	Total	17,031.11	Manual	Held	Total 17,031.11
Total for all Funds						Checks	273	Total	1,564,892.48	Manual	Held	Total 1,564,892.48

000005

ORDER TO APPROVE SHERIFF'S AGENDA ITEMS

There came on this day to be considered by the Board of Supervisors of Pearl River County, Mississippi, the matter of Sheriff's Agenda Items.

Upon motion made by Malcolm Perry and seconded by Donald Hart, the following order was adopted, to-wit:

Be It Ordered by the Pearl River County Board of Supervisors to approve the following Sheriff's Agenda Items as listed with attachments:

A. Personnel:

John Seal	Patrol Deputy	Hire part-time

B. Issue check for clothing allowance

C. Acknowledge Final Default Judgment:

Seized From:	Case No.:	Description:
Jostin Reayal Moore & Debra McCann Moore	SO20017918	Currency $16,439.00
Charles L. Burns	SO20019292	Currency $ 5,026.00

D. Purchase mobile radios from Comsouth in the amount of $88,134.00 per State Contract MS EPL 3744

E. Issue Purchase Order and payment to Kirk Auto World, Inc. per State Contract No. 8200053666 in the amount of $26,154.00 out of Drug Forfeiture Fund for a 2021 Dodge Ram 1500 Classic

F. Issue Purchase Order to Mac Haik Automotive Group per State Contract No. 8200053767 for (6) Dodge Durango Pursuit with Police Bar Light Package

G. Issue Purchase Order to Kirk Auto World per State Contract No. 8200053666 for (3) 2021 Dodge 1500 Crew Cab SSV

H. Issue Purchase Order to Cannon Motors of Mississippi per State Contract No. 8200053638 for 2021 Chrysler Voyager L

(CONTINUED ON NEXT PAGE)

I. President to execute FY22 MOHS IMPAIRED DRIVING GRANT APPLICATION - Mississippi Office of Highway Safety in the amount of $49,850.21

J. President to execute FY22 MOHS Occupant Protection Grant Application - Mississippi Office of Highway Safety in the amount of $21,442.80

K. County Administrator to execute Mississippi Public Health Institute OD2A Year One Carryover Funds Agreement to receive additional allocation of $21,814.82

Ordered and adopted, this the 5th day of April, 2021.

Voting AYE: Donald Hart, Malcolm Perry, Hudson Holliday, Jason Spence, and Sandy Kane Smith
Voting NAY: None

PEARL RIVER COUNTY SHERIFF'S DEPARTMENT
DAVID ALLISON, SHERIFF
200 SOUTH MAIN STREET
POPLARVILLE, MS 39470
Phone: (601) 403-2340
Fax: (601) 403-2344

March 31, 2021

To: The Honorable Board of Supervisors of Pearl River County, Mississippi.

Please acknowledge upon the minutes the following personnel matters concerning the Sheriff's Department.

Please hire John Seal as a part time Patrol Deputy at a pay rate of $16.50 effective April 5, 2021.

Thank you,

David Allison, Sheriff

PEARL RIVER COUNTY SHERIFF'S DEPARTMENT
DAVID ALLISON, SHERIFF
200 SOUTH MAIN STREET
POPLARVILLE, MS 39470
Phone: (601) 403-2500
Fax: (601) 403-2344

March 31, 2021

To: The Honorable Board of Supervisors of Pearl River County, Mississippi.

Please acknowledge upon the minutes the following matters concerning the Sheriff's Department.

Requesting issuance of check in the amount of $500.00 for clothing allowance pursuant to Miss. Code Ann. § 19-25-13.

1. David Allison
2. Jerry Fleming
3. Artis Garcia
4. Van Giadrosich
5. Brittany Hampton
6. Scott Maillet
7. Randy Messa
8. Marc Ogden
9. Daniel Quave
10. Joseph Quave
11. John Stachura
12. Robert Williams

Shane Edgar will receive $250.00.

Thank You,

David Allison, Sheriff

PEARL RIVER COUNTY SHERIFF'S DEPARTMENT
DAVID ALLISON, SHERIFF
200 SOUTH MAIN STREET
POPLARVILLE, MS 39470
Phone: (601) 403-2500
Fax: (601) 403-2344

March 31, 2021

To: The Honorable Board of Supervisors of Pearl River County, Mississippi.

Please acknowledge upon the minutes the following matters concerning the Sheriff's Department:

Please accept the following ***"Final Default Judgment"*** regarding seized currency. Please disburse 20% of currency to the 15th Circuit Court District Attorney's Office as stated in the Order.

Seized From	Case No.	Description
Jostin Reayal Moore & Debra McCann Moore	SO20017918	Currency $16,439.00 ($13,151.20 Sheriff and $3,287.80 District Attorney)

Thank you,

David Allison, Sheriff

000010

IN THE CIRCUIT COURT OF PEARL RIVER COUNTY, MISSISSIPPI

FILED
NANCE FITZPATRICK STOKES
CIRCUIT CLERK

MAR 12 2021

BY: D. Babin
DEPUTY CLERK

STATE OF MISSISSIPPI, EX REL
PEARL RIVER COUNTY SHERIFF'S
DEPARTMENT

PLAINTIFF(S)

VS.

CAUSE NO. 55:20-cv-00068PH

SIXTEEN THOUSAND FOUR HUNDRED AND
THIRTY-NINE AND NO/100 DOLLARD ($16,439.00)
IN UNITED STATES CURRENCY; JOSTIN REAYAL
MOORE and DEDRA McCANN MOORE

DEFENDANT

FINAL DEFAULT JUDGMENT

This cause was called for hearing in open court pursuant to the Notice of Hearing filed by the Plaintiff. There was no answer by Jostin Reayal Moore and Dedra McCann Moore and thereafter, this cause was heard on Plaintiff's Motion for Final Default Judgment pursuant to Miss. R. Civ. P. 55(b)(2). The Court finds that Plaintiff has complied with Miss. Code Ann. Section 41-29-177, as amended, as evidenced by the Petition and the Affidavit, all of which are a part of the court record.

IT IS ORDERED AND ADJUDGED that Jostin Reayal Moore and Dedra McCann Moore, be, and is hereby declared in default by failure to plead and therefore gives up any and all right, title, or interest in and to any of the property which is the subject matter of this civil action and that the Plaintiffs be and are hereby declared to be the owners of any and all property as set forth in the Petition for Forfeiture herein to the exclusion of Jostin Reayal Moore and Dedra McCann Moore.

IT IS ORDERED AND ADJUDGED that the Pearl River County Sheriff's Department, as an initiating law enforcement agency, should receive $13,151.20 which amounts to eighty (80%), and the 15th Circuit Court District Attorney's Office should receive $3,287.80, which amounts to twenty (20%) percent as a participating agency.

ORDERED AND ADJUDGED on this the 12 day of March, 2021.

CIRCUIT COURT JUDGE

PEARL RIVER COUNTY SHERIFF'S DEPARTMENT
DAVID ALLISON, SHERIFF
200 SOUTH MAIN STREET
POPLARVILLE, MS 39470
Phone: (601) 403-2500
Fax: (601) 403-2344

March 31, 2021

To: The Honorable Board of Supervisors of Pearl River County, Mississippi.

Please acknowledge upon the minutes the following matters concerning the Sheriff's Department:

Please accept the following ***"Final Default Judgment"*** regarding seized currency. Please disburse 20% of currency to the 15th Circuit Court District Attorney's Office as stated in the Order.

Seized From	Case No.	Description
Charles L. Burns	SO20019292	Currency $5,026.00 ($4,020.80 Sheriff and $1,005.20 District Attorney)

Thank you,

David Allison, Sheriff

In God We Trust

IN THE CIRCUIT COURT OF PEARL RIVER COUNTY, MISSISSIPPI 000013

FILED
NANCE FITZPATRICK STOKES
CIRCUIT CLERK

MAR 1 2 2021

BY: W. Babin
DEPUTY CLERK

STATE OF MISSISSIPPI, EX REL
PEARL RIVER COUNTY SHERIFF'S
DEPARTMENT PLAINTIFF(S)

VS. CAUSE NO. 55:20-cv-00073PH

FIVE THOUSAND AND TWENTY-SIX AND
AND 00/100 DOLLARS (5,026.00) IN
UNITED STATES CURRENCY &
CHARLES L. BURNS DEFENDANT

FINAL DEFAULT JUDGMENT

This cause was called for hearing in open court pursuant to the Notice of Hearing filed by the Plaintiff. There was no answer by Charles L. Burns and thereafter, this cause was heard on Plaintiff's Motion for Final Default Judgment pursuant to Miss. R. Civ. P. 55(b)(2). The Court finds that Plaintiff has complied with Miss. Code Ann. Section 41-29-177, as amended, as evidenced by the Petition and the Affidavit, all of which are a part of the court record.

IT IS ORDERED AND ADJUDGED that Charles L. Burns, be, and is hereby declared in default by failure to plead and therefore gives up any and all right, title, or interest in and to any of the property which is the subject matter of this civil action and that the Plaintiffs be and are hereby declared to be the owners of any and all property as set forth in the Petition for Forfeiture herein to the exclusion of Charles L. Burns.

IT IS ORDERED AND ADJUDGED that the Pearl River County Sheriff's Department, as an initiating law enforcement agency, should receive $4,020.80 which amounts to eighty (80%), and the 15th Circuit Court District Attorney's Office should receive $1,005.20, which amounts to twenty (20%) percent as a participating agency.

ORDERED AND ADJUDGED on this the 12 day of March, 2021.

Pamela Harrell

CIRCUIT COURT JUDGE

Pearl River County Sheriff's Department
David Allison, Sheriff
200 South Main Street
Poplarville, MS 39470
Phone: (601) 403-2340
Fax: (601) 403-2344

March 31, 2021

To: The Honorable Board of Supervisors of Pearl River County, Mississippi.

Please acknowledge upon the minutes the following matters concerning the Sheriff's Department.

In and for your consideration approval to purchase mobile radios, to include installation, from Comsouth Inc in the amount of $88,134.00

Thank you,

David Allison, Sheriff

In God We Trust

COMSOUTH
MISSION CRITICAL SOLUTIONS

EQUIPMENT PROPOSAL

COMSOUTH INC.
5211 Old Hwy 42
Hattiesburg, MS 39401

3/24/2021

Company Name: Pearl River County Sheriff Office
Attn: Joe Quave / Carey Meitzler
Billing Address:
City, State, Zip: Poplarville, MS
Customer Contact:
Phone:

Notes: **MS EPL 3744**
Proposal For: Equipment
Proposal Valid For: 60 Days
Terms Net: 30
Proposal Prepared By: Blake Spiers
Proposal Date: 3/24/2021

EQUIPMENT PROPOSAL

Total Order Value **$88,134.00**

Model No.	Description	Qty	Unit Price	Ext Price
	MSWIN RADIOS			
VM5930BF	VM 5000 700 / 800 MHz, Conventional/P25Trunking	45	$1,720.00	$77,400.00
KWD-5100CV	P25 Conventional	45	$0.00	$0.00
KWD-5101TR	P25 Phase 1 Trunking	45	$0.00	$0.00
KCH-19VM	Dash Mount Control Head	45	$144.00	$6,480.00
KWD-5102TR	P25 Phase 2 TDMA	45	$320.00	$14,400.00
425-6625	JOTTO DESK KENWOOD VM FACEPLATE	40	$35.00	$1,400.00
KCT-23M	DC Cable	45	$25.20	$1,134.00
KMC-65	Standard Mobile Mic	45	$42.00	$1,890.00
HAF4017A	762-870MHZ NMO MOUNT ANTENNA KIT	41	$45.00	$1,845.00
SERVICE	On-Site Installation	45	$125.00	$5,625.00
425-6625	760-896mhz CONCEALED ANTENNA	4	$115.00	$460.00
DISCOUNT	Customer Discount/Trade In	45	-$500.00	($22,500.00)

Acceptance of this proposal expires as the close of business on above Proposal Valid date. Extensions must be approved by COMSOUTH Representative.

ACKNOWLEDGEMENT AND ACCEPTANCE: **PO#**

000017

PEARL RIVER COUNTY SHERIFF'S DEPARTMENT
DAVID ALLISON, SHERIFF
200 SOUTH MAIN STREET
POPLARVILLE, MS 39470
Phone: (601) 403-2340
Fax: (601) 403-2344

March 31, 2021

To: The Honorable Board of Supervisors of Pearl River County, Mississippi.

Please acknowledge upon the minutes the following matters concerning the Sheriff's Department.

Please approve payment for the attached vehicle from Kirk Auto World under State Contract No. 8200053666. Payment is to be made out of the Drug Forfeiture Fund.

2021 Dodge Ram 1500 Classic
$26,154.00

Thank you,

David Allison, Sheriff

In God We Trust

State Contract number

000018

STANDARD/OPTIONAL EQUIPMENT FORM

DESCRIPTION:	Pick-Up Truck, 4 Wheel Drive, Crew Cab, **Special Service Vehicle**
VENDOR:	Kirk Auto World
ITEM NO.:	071-80-46254-6
MAKE/MODEL	RAM 1500 SSV
ENGINE:	5.7L V8 HEMI
PRICE INCLUDING TITLE FEE: $	$ 26,547.00

Miles Per Gallon	
City	
Hwy	
Combined	

Contract No: 8200053666
Wes Herring
Phone: 601-503-4534
Fax: 662-227-0971
E-Mail: WES@KIRKAUTOMOTIVE.COM

LIST FACTORY COLORS AVAILABLE AT NO CHARGE:
WHITE, FLAME RED
AVAILABLE FOR ADDITIONAL $188
BILLET SILVER, BLACK, GRANITE CHRYSTAL, HYDRO BLUE, MAX STEEL ,OLIVE GREEN, PATRIOT BLUE

ITEM	OPTION CODE	DEALER COST	REQ. OPTION CODE
List optional engines:			
NONE			
NOTE: NO ADDITIONAL OPTIONS ARE ALLOWED ON THIS VEHICLE			
Power Windows, Locks		INC	
Air Conditioning		INC	
Tilt/Cruise		INC	
Automatic Transmission		INC	
Trailer Towing Package		INC	
RAM BOX CARGO MANAGEMENT	XB9	$1,295	
10/20/40 BENCH	D7/X8	$45	
TRAILER BRAKE CONTROL	XHC	$272	
SPRAY IN BEDLINER	XM9	$398	
32 GALLON TANK	NFX	$409	
ALL TERRAIN TIRES	TTB	$272	
CHROME APPEARANCE GROUP	AED	$665	
PROTECTION GROUP	ADB	$374	

KIRK AUTO WORLD, INC.
DBA SUNSET CHRYSLER-DODGE-JEEP-RAM

1463 Commerce Street – P.O. Box 1267
Telephone (662) 226-5124
GRENADA, MISSISSIPPI 38901

000019

DATE 03/04/21

SOLD TO: PEARL RIVER BD OF SUPERVISORS
ADDRESS 200 SOUTH MAIN ST.
POPLARVILLE, MS 39470

INVOICE NO.

CUST. NO.	STOCK NO.	YEAR – MAKE	MODEL	NEW OR USED	VEHICLE IDENTIFICATION NO.	KEY NO.	SALESMAN
	D2645	2021 RAM	1500 CLASSIC	NEW	1C6RR7XTXMS525655		WES HERRING

INSURANCE COVERAGE INCLUDES

- ☐ FIRE AND THEFT
- ☐ COLLISION – AMT. DEDUCT.
- ☐ PUBLIC LIABILITY – AMT.
- ☐ PROPERTY DAMAGE – AMT.

OPTIONAL EQUIPMENT AND ACCESSORIES

GROUP	DESCRIPTION	PRICE
MILES:	27	

A DOCUMENT/SERVICE FEE IS NOT AN OFFICIAL FEE AND IS NOT REQUIRED BY LAW. HOWEVER, IT MAY BE CHARGED TO A BUYER/LESSEE FOR THE HANDLING OF DOCUMENTS AND THE PERFORMING OF SERVICES RELATED TO THE SALE OR LEASE AND MAY INCLUDE DEALER PROFIT. THIS NOTICE IS REQUIRED BY REGULATION OF THE MISSISSIPPI MOTOR VEHICLE COMMISSION

N/A N/A
N/A
N/A
N/A

PRICE OF CAR	26,144.00
EXTENDED SERVICE PLAN	N/A
OFFICIAL FEES	N/A
	N/A
SALES TAX	N/A
TITLE FEE	10.00
TOTAL CASH PRICE	26,154.00
NET TRADE IN ALLOWANCE	N/A
FACTORY REBATE	N/A
DEPOSIT	
CASH DUE ON DELIVERY	N/A
SETTLEMENT:	
TOTAL UNPAID BALANCE	N/A
TO BE FINANCED	26,154.00
	N/A
	0.00
TRADE IN	
MAKE AND MODEL N/A	N/A
SERIAL # N/A	
GROSS ALLOWANCE	N/A
PAYOFF	N/A
TO N/A	
NET ALLOWANCE	N/A

ALWAYS SHOW SERIAL, ENGINE AND KEY NUMBERS

000020

PEARL RIVER COUNTY SHERIFF'S DEPARTMENT
DAVID ALLISON, SHERIFF
200 SOUTH MAIN STREET
POPLARVILLE, MS 39470
Phone: (601) 403-2340
Fax: (601) 403-2344

March 31, 2021

To: The Honorable Board of Supervisors of Pearl River County, Mississippi.

Please acknowledge upon the minutes the following matters concerning the Sheriff's Department.

Please approve the purchase and financing of the below vehicle from Mac Haik Automotive Group under State Contract No. 8200053767.

What: Dodge Durango Pursuit with Police Bar Light Package (6)
Price: $213,000.00 ($35,500.00 each)

The above vehicles will fall under the Sheriff's Budget.

Thank you,

David Allison, Sheriff

In God We Trust

From: BBarlow@MacHaikMS.com,
To: deputyrwilliams@aol.com,
Subject: Quote
Date: Wed, Mar 17, 2021 7:21 am
Attachments:

000021

Mac Haik AUTOMOTIVE GROUP
POLICE

Photo may show optional equipment

$35,500

2021 DODGE DURANGO PURSUIT — $29,875

3.6L V6 24V VVT w/ Auto Transmission
Climate Control, Power Windows & Locks, Tilt & Cruise, Full Size Spare Tire and Wheel

AM/FM/CD/MP3 with Clock	Incl.
Uconnect Hands Free Communication System (7- Inch Display)	Incl.
Power Driver Seat (8-way adjustable)	Incl.
Cloth Front Bucket Cloth Rear Bench	Incl.
Dome LIGHT RED/WHITE	Incl.
Driver Side Spotlight	Incl.

POLICE BARLIGHT PACKAGE — $5625

LED Light Bar w/ Takedown and Ally Lights
Contour console w/padded armrest and cupholders
Partition w/ passenger sliding window
Rear cargo barrier
Push bumper w/ side LED lights
LED Hide-a-way in tail lights
Siren/Speaker Kit

YOUR ONE STOP SHOP FOR PUBLIC SAFTEY VEHICLES AND EQUIPTMENT

Brian Barlow P. 601.517.3097 E. bbarlow@machaikms.com

Mac Haik Dodge **5395 INTERSTATE 55N FRONTAGE ROAD** **Jackson MS 39206**

000022

STANDARD/OPTIONAL EQUIPMENT FORM

DESCRIPTION:	DODGE DURANGO PPV
VENDOR:	Jackson Mac Haik CDJR
ITEM NO.:	071-05-40027-4
MAKE/MODEL	Dodge Durango PPV
ENGINE:	3.6L 24V VVT
PRICE INCLUDING TITLE FEE:	$ 29,875

Miles Per Gallon	
City	
Hwy	
Combined	

Contract No: 8200053767
Jackson Mac Haik CDJR
6130 I-55 N
Jackson, MS 39211
Brian Barlow
E-Mail: bbarlow@machaikms.com
Phone: 601-517-3097
Fax: 601-977-8332

LIST FACTORY COLORS AVAILABLE AT NO CHARGE:

BLACK	DESTROYER GREY	GREEN GRANITE	IN-VIOLET
OCTANE RED	REACTOR BLUE	WHITE	REDLINE
BILLET SILVER			

ITEM List optional engines:	OPTION CODE	DEALER COST	REQ. OPTION CODE
V8 HEMI	22Z	$2,995	
NOTE: NO ADDITIONAL OPTIONS ARE ALLOWED ON THIS VEHICLE			
Power Windows, Locks		INC	
Air Conditioning		INC	
Tilt/Cruise		INC	
Automatic Transmission		INC	
Hands Free Capability		INC	
Full Size Spare		INC	
Front License Plate Bracket		INC	
Radio AM/FM		INC	
Black left LED Spot Light		INC	
Skid Plate Group	ADL	$266	
Floor Carpet	GXG	$113	
Blind Spot and Cross Path Detection	XAN	$446	
18X8.0 PAINTED ALUMINUM WHEELS	WP1	$313	
TRAILER TOW GROUP IV	AHX	$760	
DEATIVATE REAR DOORS/WINDOWS	CW6	$68	
DRIVER SIDE BALLISTIC DOOR PANEL	XDV	$2,183	
FRONT & REAR WIRE HARNESS	XPW	$1,287	
FULL LENGTH CONSOLE	CUF	$266	
UCONNECT 5 NAV W/10.1" DISPLAY	UBN	$878	

CLOTH BUCKET SEAT W/REAR VINYL	A7X9	$108

Orders are now being accepted but production will not begin until February 2, 2021 with delivery expected 90-120 days later.

000023

PEARL RIVER COUNTY SHERIFF'S DEPARTMENT
DAVID ALLISON, SHERIFF
200 SOUTH MAIN STREET
POPLARVILLE, MS 39470
Phone: (601) 403-2340
Fax: (601) 403-2344

March 31, 2021

To: The Honorable Board of Supervisors of Pearl River County, Mississippi.

Please acknowledge upon the minutes the following matters concerning the Sheriff's Department.

Please approve the purchase and financing of the below vehicle from Kirk Auto Group under State Contract No. 8200053666.

What: 2021 Dodge 1500 Crew Cab SSV 4X4 (3)
Price: ~~$96,315.00~~ 84345.00 DA

The above vehicles will fall under the Sheriff's Budget.

Thank you,

David Allison, Sheriff

In God We Trust

KIRK AUTO GROUP

000024

GRENADA, MS

Commercial Sales Department

2021 DODGE 1500 CREW CAB SSV-4X4

State Vendor for Contract# 8200035738

Base price on SPECIAL SERVICE VEHICLE	$	26,547.00
140"WB 5'7"BOX		
,5.7L V8 HEMI VVT		INC
6-SPD AUTOMATIC 65RFE TRANS		INC
AIR CONDITIONING-TINTED GLASS		INC
POWER WINDOWS, POWER LOCKS, POWER MIRRORS		INC
40/20/40 Seat	$	45.00
ALL TERRAIN TIRES	$	272.00
UCONNECT 5.0		INC
ANTI-SPIN REAR AXLE (3.55 RATIO)		INC
CHROME APPEARANCE PACKAGE	$	665.00
SPRAY IN BEDLINER	$	398.00
TRAILER TOW PACKAGE		INC
MONOTONE PAINT CHOICE	$	188.00
CLOTH LOW-BACK BUCKET SEATS W/PWR LUMBAR		INC
BASE VEHICLE PRICE	$	28,115.00

Dealer Options: Police Undercover Lights $ 3990.00

ULB28- DUAL COLOR Front all LED lightbar w/ takedown, 6 head light stick w/ td in rear window, 2 grille lights, remote mounted full function siren with PA, speaker, 2 flashers in reverse lights

TOTAL VEHICLE PRICE: $32,105.00

CALL OR SEE: WES HERRING

STANDARD/OPTIONAL EQUIPMENT FORM

DESCRIPTION: Pick-Up Truck, 4 Wheel Drive, Crew Cab, **Special Service Vehicle**

VENDOR: Kirk Auto World

ITEM NO.: 071-80-46254-6

MAKE/MODEL RAM 1500 SSV

ENGINE: 5.7L V8 HEMI

PRICE INCLUDING TITLE FEE: $ $ 26,547.00

Miles Per Gallon	
City	
Hwy	
Combined	

Contract No: 8200053666
Wes Herring
Phone: 601-503-4534
Fax: 662-227-0971
E-Mail: WES@KIRKAUTOMOTIVE.COM

LIST FACTORY COLORS AVAILABLE AT NO CHARGE:
WHITE, FLAME RED
AVAILABLE FOR ADDITIONAL $188
BILLET SILVER, BLACK, GRANITE CHRYSTAL, HYDRO BLUE, MAX STEEL ,OLIVE GREEN, PATRIOT BLUE

ITEM List optional engines:	OPTION CODE	DEALER COST	REQ. OPTION CODE
NONE			
NOTE: NO ADDITIONAL OPTIONS ARE ALLOWED ON THIS VEHICLE			
Power Windows, Locks		INC	
Air Conditioning		INC	
Tilt/Cruise		INC	
Automatic Transmission		INC	
Trailer Towing Package		INC	
RAM BOX CARGO MANAGEMENT	XB9	$1,295	
40/20/40 BENCH	D7/X8	$45	
TRAILER BRAKE CONTROL	XHC	$272	
SPRAY IN BEDLINER	XM9	$398	
32 GALLON TANK	NFX	$409	
ALL TERRAIN TIRES	TTB	$272	
CHROME APPEARANCE GROUP	AED	$665	
PROTECTION GROUP	ADB	$374	

PEARL RIVER COUNTY SHERIFF'S DEPARTMENT
DAVID ALLISON, SHERIFF
200 SOUTH MAIN STREET
POPLARVILLE, MS 39470
Phone: (601) 403-2340
Fax: (601) 403-2344

March 31, 2021

To: The Honorable Board of Supervisors of Pearl River County, Mississippi.

Please acknowledge upon the minutes the following matters concerning the Sheriff's Department.

Please approve the purchase and financing of the below vehicle from Cannon Motors of Mississippi under State Contract No. 8200053638.

What: 2021 Chrysler Voyager L
Price: $25,732.00

This vehicle is to fall under the Jail Budget.

Thank you,

David Allison, Sheriff

CANNON
MOTORS OF MISSISSIPPI
NOBODY Beats A Cannon Deal... NOBODY!
www.NobodyBeatsACannonDeal.com

March 17, 2021

Pearl River County Sheriff

Attention: Deputy Rob Williams

Via email: deputyrwilliams@aol.com

RE: 2021 Voyager van quote with prisoner partitions installed

Deputy Williams, below is the quote on the van that you requested. This quote includes installing a prisoner transport partition behind the front seats and behind the rear seat. Let me know if you have any questions. Thank you.

2021 Chrysler Voyager L (state contract 8200053638)	$23,152
Optional rear air (option code HAK)	$445
Optional front and rear floor mats (option code CLA)	$135
Prisoner partitions	$2,000
Final cost of van	$25,732

J. Steven Hand

J. Steven Hand

Fleet Sales Director

Cannon Motors of MS & AR

70249 Hwy 82 W

Greenwood, MS 38930

STANDARD/OPTIONAL EQUIPMENT FORM

DESCRIPTION: VAN 7 PASSENGER MINI
VENDOR: Cannon CDJR LLC
ITEM NO.: 070-9353-131-2
MAKE/MODEL Voyager L
ENGINE: 3.6L V6
PRICE INCLUDING TITLE FEE: $ 23,152.00

MPG	
City	19
Hwy	28
Combined	22

Contract No: 8200053638

Steven Hand
69860 Hwy 82 W.
Greenwood MS 38930
Email: shand@nobodybeatsacannondeal.com
Phone: 662-453-4211 ext. 3415
Fax: 662 595-4646
Email:

LIST FACTORY COLORS AVAILABLE AT NO CHARGE:

Silver White Black Velvet Red Granite Crystal

000028

ITEM	OPTION CODE	DEALER COST	REQ. OPTION CODE
List optional engines:			
No other optional engines			
Air Conditioner	INC		
Factory Installed w/tinted glass	INC		
Automatic Transmssion	INC		
Power Brakes	INC		
Power Steering	INC		
Radio AM/FM	INC		
Power Windows/ Doors	INC		
Tilt/Cruise Control	INC		
Standard Front Compartment Glass	INC		
Right Side and Rear Door Glass	INC		
Trailer Towing Package	INC		
Roof Height Options	INC		
Rearview Video System (Back-up Camera)	INC		
7 Passenger minimum	INC		
Mirrors LH & RH	INC		
Rear Air Conditioning	HAK	$445	
Front and Rear Floor Mats	CLA	$135	

In an effort to be more efficient in government spending and to save taxpayer dollars, this year's contract does not provide for any options other than the ones listed on the Standard Equipment Form. Any vehicles purchased that deviate from this list will be in violation of State Contract bid requirements. If you need any equipment other than what is listed on this form, you will need to follow normal purchasing procedures.

FY22 MOHS IMPAIRED DRIVING GRANT APPLICATION (154/405)

MISSISSIPPI OFFICE OF HIGHWAY SAFETY
1025 NORTH PARK DRIVE
RIDGELAND, MS 39157
PHONE: (601)977-3700; FAX: (601)977-3701
MOHS@DPS.MS.GOV

1. Applicant Name: Pearl River CO Board of Supervisors Sheriff's Department **Mailing Address: PO Box 569 Poplarville, MS 39470** **Telephone: 601-403-2300** **E-Mail: jquave@pearlrivercounty.net and/or nuriareyesarias@gmail.com**	2. Date: 3/21/2021
	3. Beginning and Ending Dates: _X_ Full Grant: (October 1, 2021 - September 30, 2022)
	4. Subgrant Payment Method: _X_ Cost Reimbursement Method
	5. DUNS # - **132016788**
	6. Congressional District- 4

7. Program Title: **FY22 MOHS IMPAIRED DRIVING GRANT- Pearl River County**

8. The following funds will be proposed for FY22 funding:

A. COST CATEGORY		B. SOURCE OF FUNDS	
(1) Personal Services-Salary	**$46,459.40**	(1) Federal	**$46.459.40**
(2) Personal Services-Fringe **(State Only)**		(2) State	
(3) Contractual Services		(3) Local	
(4) Travel		(4) Other	
(5) Equipment	**$3,390.81**		**$3,390.81**
(6) Commodities			
TOTAL	**$49,850.21**	TOTAL	**$49,850.21**

9. The applicant agrees to operate the program outlined in this application in accordance with all provisions as included herein. The following sections are attached and incorporated into this application:

Project Identification **Proposed Countermeasures** **Personal Services**
Contractual **Travel** **Equipment**
Commodities

All policies, terms, conditions, and provisions in the application provided to applicants are also incorporated into this agreement, and the applicant agrees to fully comply herewith.

10. Approved Signature of Authorized Official (Mayor/Board of Supervisor President/Commissioner) for Jurisdiction to Apply: Signature Date 4-5-21 **Print Name: Sandy Kane Smith** **Title:President, Board of Supervisors**	MOHS USE Only:

The Mississippi Office of Highway Safety is requesting the information below to determine if an applicant had prior experience with the same or similar sub-awards.

This section must be filled out completely for all project applications.

Please answer YES or NO to the questions below.	**YES**	**NO**
Has the agency had federal or state grants similar to the MS Office of Highway Safety grant?	X	
Has the agency had at least 3 years' experience with federal grants?	X	
Has the department staff remained unchanged during the **2021** grant year (October 2020 – current)?	X	
Has the agency administration remained unchanged during the **2021** grant year? For example, is the Authorized Signatory Official, Sheriff, and/or Chief the same individual from (October 2020 – current)?	X	
Is the agency accounting system the same as the **2020** grant year (October 2019 – September 2020)?	X	
Has the agency received a federal award **directly** from a federal awarding agency (the Department of Justice, NHTSA, or another federal agency)? If yes, answer the questions below.	X	
If your agency receives federal awards directly from a federal awarding agency, does the agency receive monitoring from that Federal awarding agency? For example, does your agency receive monitoring "directly" from the Department of Justice, NHTSA, or another federal agency? (Please note, this question is not pertaining to the sub-grantee monitoring conducted by the Mississippi Office of Highway Safety)	X	
If your agency receives direct monitoring from a Federal awarding agency, did the federal agency determine that there were no financial or compliance issues?	X	

Problem Identification: Location

This section must be filled out completely for all project applications.

City Name:	**Poplarville**
County Name:	**Pearl River County**
Surrounding Counties:	**Hancock, Stone, Lamar and Marion**
Troop District:	**Troop District 8**
Number of Officers In Agency:	**40 sworn deputies**
Number of Officers to Work Grant:	**1**

Number of Square Miles:	**819 square miles**
Number of Population:	**55,535**
Major Roadways in the Area:	**Major highways:** 1. Interstate 59 2. U.S. Highway 11 3. Mississippi Highway 13 4. Mississippi Highway 26 5. Mississippi Highway 43 6. Mississippi Highway 53

Problem Identification Summary:

Alcohol Countermeasures (154 AL) - Alcohol enforcement projects are strictly for **alcohol only** related activities, programs and projects.

Impaired Driving (405d) - Impaired Driving enforcement projects are strictly for **alcohol and drug** related activities, programs and projects.

Please provide a detailed problem identification description for the location that the grant will seek funding, such as high fatality/injury/crash areas, college/universities, factories, community events, alcohol related establishments, etc. **Please limit to 350 words for the Problem Identification Summary**.

Pearl River County is a rural area that borders Louisiana. The County is located approximately 40 miles from New Orleans, Louisiana. With such a highly populated city with one of the highest crime rates in the nation within less than an hour's drive, it increases our already strained problem of alcohol, drug, and substance abuse resulting in a higher rate of driving under the influence. Pearl River County has approximately 600 documented alcohol, drug, and substance-related cases within the last few years. According to the Mississippi State Department of Health, Pearl River County has one of the highest rates of opioid abuse in Mississippi; state statistics show the following: Pearl River is ranked number one in the state with the highest number of Opioid-related deaths from 2011 to 2018. Pearl River registered 116 deaths, with 26.2 rates per 100,000.

Through the current MS Office of Highway Safety grant targeting driving under the influence drivers, Pearl River county has documented 107 DUI arrests that were alcohol and drug-related from October 2019 to September 2020. In 2019, Pearl River County recorded 4 alcohol-related fatalities, 0 drug-related, and 13 alcohol-related injuries. The number of alcohol and drug-related fatalities has decreased due to this grant's targeted support, but we still need to work on reducing the number of injuries. The MS State Department of Health has concluded that more than half of the thirteen counties identified as "hot spots" of drug overdose deaths were concentrated in the southern geographical "drug belt." Leading the listing for this danger zone is Pearl River County.

Pearl River County faces the constant challenge of addressing alcohol, drug, and substance abuse and driving under the influence. Pearl River proposes utilizing funds from this grant to continue addressing driving under the influence to continue enforcing laws to deter impaired driving due to alcohol, drug, or substance abuse. The dedicated officer will educate and implement laws in high-speed areas, college/universities, high schools, factories, community events, alcohol-related establishments.

Proposed Target, Performance Measure and Strategies to be achieved during FY22:

See Grant Funding Guidelines for information on correct format and information needed under this section. Must be specific, measureable (include hard numbers from previous year), detailed outline of program activities and projected achievements during grant period.

Alcohol Countermeasures (154AL) - Alcohol enforcement projects are strictly for alcohol only related activities, programs and projects. Agencies must have a presence of alcohol related fatalities, injuries, and citations in service. Alcohol programs will work national priority program blitz campaigns of Drive Sober or Get Pulled Over. The alcohol program is to work within the state to reduce alcohol related DUI fatalities and injuries through high visibility enforcement, checkpoints, saturation patrols and earned media.

Impaired Driving (405d) - The Impaired Driving program is for enforcement agencies working to reduce alcohol and drug related fatalities on roadways. Agencies must have a presence of alcohol and drug related fatalities, injuries, and citations in service. Impaired Driving programs will work national priority program blitz campaigns of Drive Sober or Get Pulled Over. Grant funds are to reduce alcohol and drug related fatalities and injuries through high visibility enforcement, checkpoints, saturation patrols and earned media.

Please use 2019 fatality and injury data.

Target for Enforcement Project-Alcohol Countermeasures (154AL): Please select "reduce or maintain".

The jurisdiction/agency will (**reduce** or maintain) the number of alcohol related **fatalities** from 4 in 2019 to 2 by the end of 2022.

The jurisdiction/agency will (**reduce** or maintain) the number of alcohol related **injuries** from 13 in 2019 to 6 by the end of 2022.

Target for Enforcement Project-Impaired Driving (405d): Please select "reduce or maintain".

The jurisdiction/agency will (**reduce** or maintain) the number of alcohol related **fatalities** from 4 in 2019 to 2 by the end of 2022.

The jurisdiction/agency will (**reduce** or maintain) the number of drug related **fatalities** from 10 in 2019 to 5 by the end of 2022.

The jurisdiction/agency will (**reduce** or maintain) the number of alcohol related **injuries** from 13 in 2019 to 6 by the end of 2022.

The jurisdiction/agency will (reduce or **maintain**) the number of drug related **injuries** from 0 in 2019 to 0 by the end of 2022.

Performance Measures for Enforcement Project: Continuation Projects should use 2020 grant funded citation data, if available. If your agency has never applied for grant funds or has not applied in several years, please start your "grant funded" citations at "0". If you are requesting 405 D-Impaired Driving Funding, you must include a performance measure for alcohol and a performance measure for impaired (drug). **Please select "increase or maintain".**

(**Increase** or Maintain) the number of grant funded DUI Arrest citations from 69 in FY20 to 89 in FY22.

** If applying for (405 D) fund: Please include measure listed below**

(**Increase** or Maintain) the number of grant funded DUI Other (drug) citations from 38 in FY20 to 48 in FY22.

Strategies for Project:

- Conduct at least 60 checkpoints during the year. (Enforcement Only)
- Conduct at least 40 saturation patrols during the year. (Enforcement Only)
- Conduct at least 4 alcohol presentations during year (If Applicable for 154 Alcohol Funding Grants Only with a Individual Officer)
- Will there be Law Enforcement Instructor training (SFST, ARIDE, DRE) hours/time conducted and/or claimed during grant period? (Individual Officers Only-This is a requirement for instructors to receive reimbursement)

___X__ Yes _____ No

FY22 Proposed Program Coordination:

If grant is awarded, please identify the following persons that will be working on grant activities and will be responsible for the grant. **NOTE: The signatory official is the Mayor, Board of Supervisors President, or Commissioner**

Name of Chief/Sheriff/Partner:David Allison , Sheriff	**Name of Project Director: Nuria Reyes-Arias**
Phone Number: 6017985528	**Phone Number: 601347-2590/ 5047158640**
Email Address:jquave@pearlrivercounty.net	**Email Address: nuriareyesarias@gmail.com**

Name of Financial Manager: Adrain Lumpkin	**Name of Signatory Official:Sandy Kane Smith**
Phone Number: 601-916-9203	**Phone Number: 601-916-2317**
Email Address: Alumpkin@pearlrivercounty.net	**Email Address: sksmith@pearlrivercounty.net**

FY22 Proposed Program Coordination:
Proposed Project Staff for Grant Responsibilities:

Submit information for proposed project staff that will be funded with federal funds under the grant agreement. All expenses must be in accordance to current state and federal guidelines.

Unallowable Personnel Expenses for FY22: Fringe benefits (FICA & Retirement) and health insurance will not be allowable personnel expenses during FY22 for local law enforcement agencies. Fringe benefits is only allowable for state agencies.

The **Special Traffic Enforcement (STEP) Officer(s)** work Overtime Enforcement Only grants. On this project, the STEP officer is defined as a non-individual officer. All grant funded hours worked as a STEP Officer must be over and beyond the officer's normal work hours for his/her agency.

The **Individual Officer(s)** on this project is defined as an officer working enforcement at approximately 2080 hours at an approximate rate of pay per hour. (Continuation Projects Only)

Individual Officer Criteria: The MS Office of Highway Safety may provide funding for a currently approved Individual DUI Officer. In order to maintain funding for an individual officer, an agency must be a continuation project and meet 60% of the following criteria:

- At least (1) DUI Fatal in 2019;
- At least (1) DUI Injury in 2019;
- Top 30 Alcohol or Drug Fatality County;
- FY20 Grant Funded Arrests of 52 or higher, per officer;
- Met or Exceeded Performance Measures agreed upon by agency in FY20 Grant Agreement

Personnel Title:	% of Time	Regular Rate of Pay	Overtime Rate of Pay	# of Hours	Total
Officer Neil Dugas	100	$16.70/hr	$25.05	86 (an average of 14 hours overtime) per pay period	$1786.90

The regular and overtime rate of pay noted above should be the rate of pay the officer is paid by your agency. The rate of pay should not be increased for grant purposes. If approved for funding, all pay rates

requested for reimbursement will be verified with the agency check stub and/or agency payroll documentation.

(STATE AGENCY ONLY)

Fringe Amounts: When a State enforcement agency includes overtime salary or wages, traffic safety funds can pay for the additional cost of fringe benefits (FICA and Retirement only).

Submit information for proposed fringe amounts per project staff that will be funded with federal funds under the grant agreement.

Personnel:	Fringe Item (FICA and/or Retirement):	%	Total
Total Fringe:			

FY22 Proposed Contractual Services Expenses:

Include a detailed assessment of contractual services within the program area in which you will be applying. Also, include a cost estimate for all contractual needs (rental, shipping costs, etc.). All expenses must be in accordance to current state and federal guidelines.

Type of Contractual Service Expenses:	Quantity/Amount of Service/Amount per Month:	Total Costs of Expenses:
Total Contractual Service Expense:		

FY22 Proposed Travel Expenses:

Include a detailed assessment of travel needs within the program area in which you will be applying. Also, include a cost estimate for all travel needs (airfare, hotel, hotel taxes, per diem, mileage, parking, baggage, and gratuity). All expenses must be in accordance to current state and federal guidelines.

Type of Travel:	Number of People:	Cost:	Total:
Total Travel Expense:			

FY22 Proposed Equipment:

Grant funding must be tied to performance, data and problem identification. Applicants that are requesting equipment only applications will **not** be funded. Please list the cost for each piece of equipment requested.

Federal guidelines require equipment purchased must be essential to the project. If any equipment is requested in the application, **please include quotes (0 to $5,000.00 requires one quote, over $5,000.00 requires two quotes)** for the equipment, equipment descriptions and a thorough explanation of the use of the equipment and how it will impact the target and the agency problem identification.

All equipment must be approved by MOHS and/or NHTSA, be included on the Conforming Product List (CPL) and must be used specifically for the purposes for which it is purchased. CPL list can be found at:

Unallowable equipment for FY22: Guns, Ammunition, Uniforms, Vehicles, Body Armor and Body Cameras. Radar and lidars are unallowable under alcohol/impaired funding sources.

Type of Equipment:	# Requested:	Cost Per Item (Quote Required):	Line Total:
AS FST Mississippi Instrument Set Including: 25 mouthpieces, 2 passive cups, drink sniffer, carrying case, wrist strap and web-based training DOM-MSFST 5 AS FST (F332-06) 3S STD BRAC 40-2010-00 125 MOUTHPIECE ALCO-SENSOR FST 23-0120-00 10 Mouthpiece Cup Pass Soft Blue FST / ASVXL 23-0175-00 MOUTHPIECE DRINK SNIFFER ASFST OR 23-0190-00 ASVXL 5 5 CASE WRIST STRAP INTOXIMETERS 27-0825-00	5	445.00	$2,225.00

CASE FST SURE-GRIP YELLOW COMP 27-9818-50 W/MAGNETS 5 5 CASE MOLDED FST/AS3 29-0630-00 Web Based AS FST Operator Training WEB-FST (Interactive Operator Training Through Internet) 5 5 WARRANTY: 1-YEAR PARTS AND LABOR WARR-1			
1,000 MOUTHPIECE ALCO-SENSOR FST 23-0120-00	10	$0.240	$240.00
Est. Freight	1		$50.00
For Laptop-Crucial - DDR4 - 8 GB - SO-DIMM 260-pin - unbuffered 1 4629000 Mfg. Part#: CT8G4SFS8266 UNSPSC: 32101602 Contract: Sourcewell 081419-CDW Tech Catalog (081419#CDW) HP ProBook 450 G8 - 15.6" - Core i5 1135G7 - 8 GB RAM - 256 GB SSD - US	1	38.19	38.19
Laptop -1 6300771 Mfg. Part#: 28K93UT#ABA Contract: Sourcewell 081419-CDW Tech Catalog (081419#CDW)	1	$837.62	837.62

Total Equipment Expense:			$3,390.81

FY22 Proposed Commodities:

Include a detailed assessment of other grant expenses within the program area in which you are applying. Also, include a cost estimate for all additional grant expenses (mouthpieces, gloves, traffic safety cones, flashlights, reflective safety vests, etc.). All expenses must be in accordance to current state and federal guidelines.

Federal guidelines require commodities purchased must be essential to the project. If any commodities are requested in the application, **please include quotes (0 to $5,000.00 requires one quote, over $5,000.00 requires two quotes)** for the commodities, commodities descriptions and a thorough explanation of the use of the commodities and how it will impact the target and the agency problem identification.

Type of Commodity Expenses:	Quantity	Cost Per Item (Quote Required):	Total of Expense:
Total of Commodity Expenses:			

Mississippi Office of Highway Safety

MOHS FY22 Application Submission

The application submitted to the MOHS is a request for funds. Funding is based on funds available to the MOHS through federal and state funds. Application requests received are not guaranteed and will be subject to be adjusted, as funding is available.

Each application will be reviewed by the MOHS staff and management for application completeness, data provided, citation information, budget requests of personnel, contractual services, travel, equipment and other expenses requested to enhance the already existing program. The proposed targets, performance measure and strategies are also reviewed for effectiveness and efficiency.

Applications received from continuation grant agencies will be reviewed by MOHS staff and management for application completeness, data provided, citation information, budget requests of personnel, contractual services, travel, equipment and other expenses requested to enhance the already existing program. Grants will also be funded based on the review of past grant performance of meeting targets and performance measures, expenditure of previous grant funds and information from program documentation and assessments.

The MOHS grant program is a data driven program and all applications must represent a need and the ability to help reach the State's target and performance measures to help reduce fatalities, crashes and injuries.

Submission of A-133 Financial Audit

All applicants for the FY22 MOHS Grant Application must submit a copy of the most recent A-133 financial audit from the requesting agency. If the A-133 financial audit is not included with the grant application, the application will not be considered for funding eligibility.

Incomplete Applications:

If all sections of this Application are not filled out, documentation provided and/or justifications provided, this Application will not be considered for review and/or approval. This includes missing signatures.

Agreement of Understanding and Compliance:

The Agreement of Understanding and Compliance documents will be attached within the FY22 Grant

Agreement. The Applicant will be required to sign all compliance documents upon receipt of the finalized Grant Agreement between the State, MOHS and applicant. Certifications and assurances will be included in the Grant Agreement.

QUOTE CONFIRMATION

PEOPLE WHO GET IT

DEAR JESSE TAYLOR,

Thank you for considering CDW•G for your computing needs. The details of your quote are below. Click here to convert your quote to an order.

QUOTE #	QUOTE DATE	QUOTE REFERENCE	CUSTOMER #	GRAND TOTAL
LXGC916	2/12/2021	HP LAPTOP WITH RAM	7625128	$875.81

QUOTE DETAILS

ITEM	QTY	CDW#	UNIT PRICE	EXT. PRICE
Crucial - DDR4 - 8 GB - SO-DIMM 260-pin - unbuffered Mfg. Part#: CT8G4SFS8266 UNSPSC: 32101602 Contract: Sourcewell 081419-CDW Tech Catalog (081419#CDW)	1	4629000	$38.19	$38.19
HP ProBook 450 G8 - 15.6" - Core i5 1135G7 - 8 GB RAM - 256 GB SSD - US Mfg. Part#: 28K93UT#ABA Contract: Sourcewell 081419-CDW Tech Catalog (081419#CDW)	1	6300771	$837.62	$837.62

PURCHASER BILLING INFO

Billing Address:
PEARL RIVER COUNTY
ACCTS PAYABLE
PO BOX 569
PURCHASING
POPLARVILLE, MS 39470-0569
Phone: (601) 403-2300
Payment Terms: Net 30 Days-Govt State/Local

DELIVER TO

Shipping Address:
PEARL RIVER COUNTY
JESSE TAYLOR
200 S MAIN ST
PURCHASING
POPLARVILLE, MS 39470-2822
Shipping Method: UPS Ground

SUBTOTAL	$875.81
SHIPPING	$0.00
SALES TAX	$0.00
GRAND TOTAL	$875.81

Please remit payments to:

CDW Government
75 Remittance Drive
Suite 1515
Chicago, IL 60675-1515

Need Assistance? CDW•G SALES CONTACT INFORMATION

Alyssa McArthur-Guzman | (877) 621-3156 | alysmca@cdwg.com

This quote is subject to CDW's Terms and Conditions of Sales and Service Projects at http://www.cdwg.com/content/terms-conditions/product-sales.aspx
For more information, contact a CDW account manager

© 2021 CDW•G LLC, 200 N. Milwaukee Avenue, Vernon Hills, IL 60061 | 800.808.4239

Intoximeters Inc.
2081 Craig Road - Saint Louis, MO 63146
Phone: [+1] (314) 429 4000 - Fax: [+1] (314) 429 4170 - Email: bgreenwood@intox.com

000043

QUOTATION

Date	Quote #
04/01/2021	001-00-25515787

Sold To: Pearl River County Sheriffs Department
ATTN: Quave, Joe
171 Savannah Millard Road
Poplarville, MS 39470-2839
USA

Phone: (601) 403-2300
Fax: (601) 403-2334

Ship To: Pearl River County Sheriffs Department
ATTN: Quave, Joe
171 Savannah Millard Road
Poplarville, MS 39470-2839
USA

Phone: (601) 403-2300
Fax: (601) 403-2334

Payment Terms	Rep	P.O. Number	Ship Via	Shipping Term	Delivery Term
Net 30 Days	Byron Greenwood		FED EX	ORIGIN	Ground

Ln #	Qty	Description	Part No.	Unit Price	Extended Price
1	5	AS FST Mississippi Instrument Set Including: 25 mouthpieces, 2 passive cups, drink sniffer, carrying case, wrist strap and web-based training	DOM-MS-FST	$445.000	$2,225.00
	5	AS FST (F332-06) 3S STD BRAC	40-2010-00		
	125	MOUTHPIECE ALCO-SENSOR FST	23-0120-00		
	10	Mouthpiece Cup Pass Soft Blue FST / ASVXL	23-0175-00		
	5	MOUTHPIECE DRINK SNIFFER ASFST OR ASVXL	23-0190-00		
	5	CASE WRIST STRAP INTOXIMETERS	27-0825-00		
	5	CASE FST SURE-GRIP YELLOW COMP W/MAGNETS	27-9818-50		
	5	CASE MOLDED FST/AS3	29-0630-00		
	5	MANUAL QUICK REFERENCE GUIDE FST LAMINATED	26-0140-20		
	5	Web Based AS FST Operator Training (Interactive Operator Training Through Internet)	WEB-FST		
	5	WARRANTY: 1-YEAR PARTS AND LABOR	WARR-1		
11	1,000	MOUTHPIECE ALCO-SENSOR FST	23-0120-00	$0.240	$240.00

Sub total	**$2,465.00**
Sales Tax	**$0.00**
Est. Freight	**$50.00**
Total	**$2,515.00**

Ln #	Qty	Description	Part No.	Unit Price	Extended Price

Standard Terms & Conditions of Intoximeters, Inc. apply to all orders.
All prices are quoted in US Dollars and valid for 60 days unless noted.
Federal ID# 43-0906533
Country of Origin: USA

000044

(Electronic Signature) Signed :

Buron Greenwood

Regional Sales Manager

FY22 MOHS Occupant Protection Grant Application (402)

Mississippi Office of Highway Safety
1025 North Park Drive
Ridgeland, MS 39157
Phone: (601)977-3700; Fax: (601)977-3701
mohs@dps.ms.gov

1. Applicant Name: Pearl River CO Board of Supervisors Sheriff's Department **Mailing Address: PO Box 569 Poplarville, MS 39470** **Telephone: 601-403-2300** **E-Mail: jquave@pearlrivercounty.net and/or nuriareyesarias@gmail.com**	2. Date: 3/31/2021
	3. Beginning and Ending Dates: __X__ Full Grant: (October 1, 2021 - September 30, 2022) ____ Mini Grant: (April 1, 2022 - September 30, 2022) ____ Other (Specify Date: _____)
	4. Subgrant Payment Method: _X_ Cost Reimbursement Method
	5. DUNS # - **132016788**
	6. Congressional District- **4**

7. Program Title: Police Traffic Services- **Occupant Protection (402)** **- Pearl River County**

8. The following funds will be proposed for FY22 funding:

A. COST CATEGORY		B. SOURCE OF FUNDS	
(1) Personal Services-Salary	**$21,442.80**	(1) Federal	**$21,442.80**
(2) Personal Services-Fringe **(State Only)**		(2) State	
(3) Contractual Services		(3) Local	
(4) Travel		(4) Other	
(5) Equipment			
(6) Commodities			
TOTAL		TOTAL	**$21,442.80**

9. The applicant agrees to operate the program outlined in this application in accordance with all provisions as included herein. The following sections are attached and incorporated into this application:

Project Identification **Proposed Countermeasures** **Personal Services**
Contractual **Travel** **Equipment**
Commodities

All policies, terms, conditions, and provisions in the application provided to applicants, are also incorporated into this agreement, and applicant agrees to fully comply herewith.

10. Approved Signature of Authorized Official (Mayor/Board of Supervisor President/Commissioner) for Jurisdiction to Apply:	MOHS USE Only:
Signature Date 4-5-21 Print Name: **Sandy Kane Smith** Title:**President, Board of Supervisors**	

The Mississippi Office of Highway Safety is requesting the information below to determine if a applicant had prior experience with the same or similar sub-awards.

This section must be filled out completely for all project applications.

Please answer YES or NO to the questions below.	**YES**	**NO**
Has the agency had federal or state grants similar to the MS Office of Highway Safety grant?	X	
Has the agency had at least 3 years' experience with federal grants?	X	
Has the department staff remained unchanged during the **2021** grant year (October 2020 – current)?	X	
Has the agency administration remained unchanged during the **2021** grant year? For example, is the Authorized Signatory Official, Sheriff, and/or Chief the same individual from (October 2020 – current)?	X	
Is the agency accounting system the same as the **2020** grant year (October 2019 – September 2020)?	X	
Has the agency received a federal award **directly** from a federal awarding agency (the Department of Justice, NHTSA, or another federal agency)? If yes, answer the questions below.	X	
If your agency receives, federal awards directly from a federal awarding agency, does the agency receive monitoring from that Federal awarding agency? For example, does your agency receive monitoring "directly" from the Department of Justice, NHTSA, or another federal agency? (Please note, this question is not pertaining to the sub-grantee monitoring conducted by the Mississippi Office of Highway Safety)	X	
If your agency receives direct monitoring from a Federal awarding agency, did the federal agency determine that there were no financial or compliance issues?	X	

Problem Identification: Location

This section must be filled out completely for all project applications.

City Name:	Poplarville Pearl River County
County Name:	Hancock, Stone, Lamar and Marion
Surrounding Counties:	Troop District 8
Troop District:	40 sworn deputies
Number of Officers In Agency:	Poplarville Pearl River County
Number of Officers to Work Grant:	Hancock, Stone, Lamar and Marion

Number of Square Miles:	819 square miles
Number of Population:	55,535
Major Roadways in the Area:	Major highways: 1. Interstate 59 2. U.S. Highway 11 3. Mississippi Highway 13 4. Mississippi Highway 26 5. Mississippi Highway 43 6. Mississippi Highway 53

Problem Identification Summary:

Police Traffic Services (402 PT) - Police Traffic Services enforcement projects are for seatbelt, child restraint, and speed related activities, programs, and projects.

Please provide a detailed problem identification description for the location that the grant will seek funding, such as high unbelted and speed areas, high fatality/injury/crash areas, college/universities, factories, community events, etc. **Please limit to 350 words for the Problem Identification Summary**.

Pearl River County is a rural area that borders Louisiana. The County is located approximately 40 miles from New Orleans, Louisiana. With such a highly populated city with one of the highest crime rates in the nation within less than an hour's drive, it increases our already strained problem of alcohol, drug, and substance abuse and endangerment of occupants. Between October 2019 and September 2020, Pearl River County documented ten seat belt citations and three child restraints citations. Through the current MS Office of Highway safety grant, Pearl River County plans to target occupant protection. Pearl River County proposes to utilize funds from this grant to continue addressing Occupant Protection and educating the community on the importance of using seat belts and child safety. The County will advocate through its designated officers that buckling up and using correctly installed child seats are vital to protecting yourself and your family in a crash.

One of the safest choices drivers and passengers can make is to buckle up. Many Americans understand the seat belt's lifesaving value – the national use rate was at 90.7% in 2019. Seat belt use in passenger vehicles saved an estimated 14,955 lives in 2017. Designated officers will work to help drivers and passengers understand the potentially fatal consequences of not wearing a seat belt and learn what they can do to make sure they and their families are appropriately buckled up every time.

Proposed Target, Performance Measure and Strategies to be achieved during FY22:

See Grant Funding Guidelines for information on correct format and information needed under this section. Must be specific, measureable (include hard numbers from previous year), detailed outline of program activities and projected achievements during grant period.

Police Traffic Services (402 PT) - The traffic enforcement necessary to directly impact fatalities and injuries which includes all aspects of traffic enforcement in the combined areas of Occupant Protection, Child Restraint and Speed. Police Traffic Service programs will work the national priority program blitz campaign Click It or Ticket.

Please use 2019 fatality and injury crash data.

Target for Enforcement Project-Police Traffic Services (402PT): Please select "reduce or maintain".

The jurisdiction/agency will (**reduce** or maintain) the number of unbelted fatalities from 5 in 2019 to 3 by the end of 2022.

The jurisdiction/agency will (**reduce** or maintain) the number of unbelted injuries from 26 in 2019 to 18 by the end of 2022.

The jurisdiction/agency will (**reduce** or maintain) the number of speed fatalities from 3 in 2019 to 0 by the end of 2022.

The jurisdiction/agency will (**reduce** or maintain) the number of speed injuries from 24 in 2019 to 16 by the end of 2022.

Performance Measures for Enforcement Project: Continuation Projects should use 2020 grant funded citation data, if available. If your agency has never applied for grant funds or has not applied in several years, please start your "grant funded" citations at "0". **Please select "increase or maintain".**

(**Increase** or Maintain) the number of grant funded Seat Belt citations from 10 in FY20 to 20 in FY22.

(**Increase** or Maintain) the number of grant funded Child Restraint citations from 3 in FY20 to 10 in FY22.

(**Increase** or Maintain) the number of grant funded Speed citations from 5 in FY20 to 15 in FY22.

Strategies for Project:

- Conduct at least 6 checkpoints during the year. (Enforcement Only)
- Conduct at least 12 saturation patrols during the year. (Enforcement Only)

FY22 Proposed Program Coordination:

If grant is awarded, please identify the following persons that will be working on grant activities and will be responsible for the grant. **NOTE: The signatory official is the Mayor, Board of Supervisors President, or Commissioner**

Name of Chief/Sheriff/Partner: David Allison	**Name of Project Director:Major Joe Quave and Nuria Reyes-Arias**
Phone Number: 6017985528	**Phone Number:601347-2590/ 5047158640**
Email Address: jquave@pearlrivercounty.net	**Email Address: nuriareyesarias@gmail.com**

Name of Financial Manager: Adrian Lumpkin	Name of Signatory Official: Sandy Kane Smith
Phone Number: 601-916-9203	Phone Number: 601-916-2317
Email Address: alumpkin@pearlrivercounty.net	Email Address: sksmith@pearlrivercounty.net

FY22 Proposed Program Coordination:
Proposed Project Staff for Grant Responsibilities:

Submit information for proposed project staff that will be funded with federal funds under the grant agreement. All expenses must be in accordance to current state and federal guidelines.

Unallowable Personnel Expenses for FY22: Fringe benefits (FICA & Retirement) and health insurance will not be allowable personnel expenses during FY22 for local law enforcement agencies. Fringe benefits is only allowable for state agencies.

The **Special Traffic Enforcement (STEP) Officer(s)** work Overtime Enforcement Only grants. On this project, the STEP officer is defined as a non-individual officer. All grant funded hours worked as a STEP Officer must be over and beyond the officer's normal work hours for his/her agency.

Personnel Title:	% of Time	Regular Rate of Pay	Overtime Rate of Pay	# of Hours	Total:
Officer(s) dedicated to project	30	16.70	25.05	856	**21,442.80**

The regular and overtime rate of pay noted above should be the rate of pay the officer is paid by your agency. The rate of pay should not be increased for grant purposes. If approved for funding, all pay rates requested for reimbursement will be verified with the agency check stub and/or agency payroll documentation.

(STATE AGENCY ONLY)
Fringe Amounts: When a State enforcement agency includes overtime salary or wages, traffic safety funds can pay for the additional cost of fringe benefits (FICA and Retirement only).

Submit information for proposed fringe amounts per project staff that will be funded with federal funds under the grant agreement.

Personnel:	Fringe Item (FICA and/or Retirement):	%	Total

Total Fringe:			

FY22 Proposed Contractual Services Expenses:

Include a detailed assessment of contractual services within the program area in which you will be applying. Also, include a cost estimate for all contractual needs (rental, shipping costs, etc.). All expenses must be in accordance to current state and federal guidelines.

Type of Contractual Service Expenses:	Quantity/Amount of Service/Amount per Month:	Total Costs of Expenses:
Total Contractual Service Expense:		

FY22 Proposed Travel Expenses:

Include a detailed assessment of travel needs within the program area in which you will be applying. Also, include a cost estimate for all travel needs (airfare, hotel, hotel taxes, per diem, mileage, parking, baggage, and gratuity). All expenses must be in accordance to current state and federal guidelines.

Type of Travel:	Number of People:	Cost:	Total:
Total Travel Expense:			

FY22 Proposed Equipment:

Grant funding must be tied to performance, data and problem identification. Applicants that are requesting equipment only applications will **not** be funded. Please list the cost for each piece of equipment requested.

Federal guidelines require equipment purchased must be essential to the project. If any equipment is requested in the application, **please include quotes (0 to $5,000.00 requires one quote, over $5,000.00 requires two quotes)** for the equipment, equipment descriptions and a thorough explanation of the use of the equipment and how it will impact the target and the agency problem identification.

All equipment must be approved by MOHS and/or NHTSA, be included on the Conforming Product List (CPL) and must be used specifically for the purposes for which is purchased. CPL list can be found at:

Unallowable equipment for FY22: Guns, Ammunition, Uniforms, Vehicles, Body Armor and Body Cameras. Radar and lidars are unallowable under alcohol/impaired funding sources.

Type of Equipment:	# Requested:	Cost Per Item (Quote Required):	Line Total:
Total Equipment Expense:			

FY22 Proposed Commodities:

Include a detailed assessment of other grant expenses within the program area in which you are applying. Also, include a cost estimate for all additional grant expenses (mouthpieces, gloves, traffic safety cones, flashlights, reflective safety vests, etc.). All expenses must be in accordance to current state and federal guidelines.

Federal guidelines require commodities purchased must be essential to the project. If any commodities are requested in the application, **please include quotes (0 to $5,000.00 requires one quote, over $5,000.00 requires two quotes)** for the commodities, commodities descriptions and a thorough explanation of the use of the commodities and how it will impact the target and the agency problem identification.

Type of Commodity Expenses:	Quantity	Cost Per Item (Quote Required):	Total of Expense:
Total of Commodity Expenses:			

Mississippi Office of Highway Safety

MOHS FY22 Application Submission

The application submitted to the MOHS is a request for funds. Funding is based on funds available to the MOHS through federal and state funds. Application requests received are not guaranteed and will be subject to be adjusted, as funding is available.

Each application will be reviewed by the MOHS staff and management for application completeness, data provided, citation information, budget requests of personnel, contractual services, travel, equipment and other expenses requested to enhance the already existing program. The proposed targets, performance measure and strategies are also reviewed for effectiveness and efficiency.

Applications received from continuation grant agencies will be reviewed by MOHS staff and management for application completeness, data provided, citation information, budget requests of personnel, contractual services, travel, equipment and other expenses requested to enhance the already existing program. Grants will also be funded based on the review of past grant performance of meeting targets and performance measures, expenditure of previous grant funds and information from program documentation and assessments.

The MOHS grant program is a data driven program and all applications must represent a need and the ability to help reach the State's target and performance measures to help reduce fatalities, crashes and injuries.

Submission of A-133 Financial Audit

All applicants for the FY22 MOHS Grant Application must submit a copy of the most recent A-133 financial audit from the requesting agency. If the A-133 financial audit is not included with the grant application, the application will not be considered for funding eligibility.

Incomplete Applications:

If all sections of this Application are not filled out, documentation provided and/or justifications provided, this Application will not be considered for review and/or approval. This includes missing signatures.

Agreement of Understanding and Compliance:

The Agreement of Understanding and Compliance documents will be attached within the FY22 Grant Agreement. The Applicant will be required to sign all compliance documents upon receipt of the finalized Grant Agreement between the State, MOHS and applicant. Certifications and assurances will be included in the Grant Agreement.

OD2A Year One Carryover Funds AGREEMENT

Mississippi Public Health Institute 829 Wilson Drive, Suite C Ridgeland, MS 39157 Program Contact: - Jan Dawson SUD Program Director jdawson@msphi.org Financial Contact: Ken Seawright kseawright@msphi.org 601-398-4406	**Pearl River County** 207 West Pearl St. Poplarville, MS 39470 Primary Contact: Adrian Lumpkin Program Director alumpkin@pearlrivercounty.net Financial/Operations Contact: Nuria Reyes-Arias nuriareyesarias@gmail.com 5047158640

Mr. Lumpkin:

This letter is to inform you that Pearl River County will receive an additional allocation of $ 21,814.82 in carry over funds for year one of the OD2A project. These funds must be spent by Friday, April 30, 2021. All cash requests submitted using these funds must have invoice dates of April 30, 2021 or prior to be eligible to expense these funds.

All grant guidelines for spending still applies for appropriate use of these funds.

In Witness Whereof, the parties hereto have duly executed this Agreement as of the day and year first above written.

By: _____ Date: 4-5-21

Mr Adrain Lumpkin who is the County Administrator, Pearl River County

By: _____ Date_____

Jan Dawson, Ed.S., SUD Program Director, Mississippi Public Health Institute

Minute Book Text Detail
Book 0216 Page 55 PERSONNEL CONSENT AGENDA ITEMS
Date 4/ 5/2021

ORDER TO APPROVE PERSONNEL CONSENT AGENDA ITEMS

There came on this day to be considered by the Board of Supervisors of Pearl River County, Mississippi, the matter to approve Personnel Consent Agenda Items.

Upon motion made by Malcolm Perry and seconded by Jason Spence, the following order was adopted, to-wit:

Be It Ordered by the Pearl River County Board of Supervisors to approve the following Personnel Consent Agenda Items as listed with attachments:

A. Central Dispatch:
Marrissa Jo Diamond Resign

B. Economic Development Director:
Blaine LaFontaine Resign

C. Economic Development Director:
Lindsey Ward Hire

Ordered and adopted, this the 5th day of April, 2021.

Voting AYE: Donald Hart, Malcolm Perry, Hudson Holliday, Jason Spence, and Sandy Kane Smith
Voting NAY: None

PEARL RIVER COUNTY
MISSISSIPPI
Est. 1890

Pearl River County Central Dispatch

March 31, 2021

To: The Honorable Board of Supervisors of Pearl River County, Mississippi.

Please acknowledge upon the minutes the following personnel matters concerning the Pearl River County Central Dispatch:

Accept the resignation of Marrissa Jo Diamond effectively March 31, 2021.

Thank you,

3/31/2021

Carey Meitzler, Director

Blaine LaFontaine
17143 Fenton Dedeaux Road
Kiln, MS 39556
228-493-8283
blafontaine2005@gmail.com

3/18/2021

Mr. Adrain Lumpkin
County Administrator
Pearl River County Board of Supervisors
200 S Main St.
Poplarville, MS 39470

Mr. Lumpkin,

I would like to formally provide you with this letter as a result of our discussions over the past week that I am resigning from my position as Economic Development Director for Pearl River County Board of Supervisors, effective March 22, 2021.

Thank you for the support, friendship and opportunities that you have provided me over the last year. I have truly enjoyed my tenure with Pearl River County Board of Supervisors and am more than grateful for the success and foundation we worked to establish.

If I can be of any assistance during this transition to my successor, or developing any regional opportunities please let me know. I would be glad to help however I can and always a phone call away.

Sincerely,

Blaine LaFontaine

Blaine LaFontaine

SANDY KANE SMITH
President, District Five
MALCOLM PERRY
Vice-President, District Two
DONALD HART
District One

PEARL RIVER COUNTY
MISSISSIPPI
Est. 1890

HUDSON HOLLIDAY
District Three
JASON SPENCE
District Four
MELINDA BOWMAN
Clerk of Board

000058

BOARD OF SUPERVISORS
PEARL RIVER COUNTY
P.O. BOX 569
POPLARVILLE, MS 39470
(601) 403-2300
(601) 403-2309 Fax
ADRAIN LUMPKIN, JR.
County Administrator

March 30, 2021

Board of Supervisors,

Please approve the hiring of Lindsey Ward as Economic Development Director to fill the position held by Blaine LaFontaine.

Thanks,

Adrain

Minute Book Text Detail
Book 0216 Page 59 ROAD DEPARTMENT'S AGENDA ITEMS
Date 4/ 5/2021

ORDER TO APPROVE ROAD DEPARTMENT'S AGENDA ITEMS

There came on this day to be considered by the Board of Supervisors of Pearl River County, Mississippi, the matter of Road Department's Agenda Items.

Upon motion made by Malcolm Perry and seconded by Donald Hart, the following order was adopted, to-wit:

Be It Ordered by the Pearl River County Board of Supervisors to approve the following Road Department's Agenda Items as listed with attachments:

A. Personnel:

Aaron Taylor	Terminate
Mark Smith	Terminate

B. Accept Comprehensive 4 Year Road Plan for 2020-2023

Ordered and adopted, this the 5th day of April, 2021.

Voting AYE: Donald Hart, Malcolm Perry, Hudson Holliday, Jason Spence, and Sandy Kane Smith
Voting NAY: None

memo

000060

Pearl River County Road Department

To:	Pearl River County Board of Supervisors
From:	Charlie Schielder
CC:	Marlinda Guerra
Date:	3/31/2021
Re:	Personnel

Comments: **I would like to terminate : Aaron Taylor** his family medical leave has ended and he is unable to return to work. Effective March 31, 2021, **and Mark Smith** is unable to return to work effective March 31, 2021.

memo

Pearl River County Road Department

To: Pearl River County Board of Supervisors
From: Charlie Schielder
CC:

Date: 3/31/2021
Re: 4 Year Road Plan

Comments: **I would like to submit the 4 Year Road Plan for approval.**

PEARL RIVER COUNTY

COMPREHENSIVE

4 YEAR ROAD PLAN

2020-2023

District 1 – Donald Hart

District 2 - Malcolm Perry

District 3 - Hudson Holliday

District 4 - Jason Spence

District 5 - Sandy Kane Smith

Pearl River County, fourth largest in the state of Mississippi with 891 square miles, is located 60 miles south of Hattiesburg and 50 miles north of New Orleans, La.

The county is served by Interstate Highway 59 and U.S. Highway 11, which traverse the county, and is paralleled by the Norfolk Southern Railroad. Mississippi Highway 26 extends from Bogalusa, La. through Poplarville, the county seat, and on to Wiggins. Mississippi Highway 53 originates in Poplarville and exits the county in the extreme SE corner.

Pearl River County is served by two local airports. Picayune Airport recently constructed a new airport off Ridge Rd to have a 5,000 foot lighted runway with instrument approach and Poplarville Airport with a 4,000 foot runway.

Approximately 75% of the population of Pearl River County resides outside the corporate limits, requiring safe, year-round all weather roads and bridges.

The intent and purpose of this department is to maintain all county and State-Aid roads to the highest possible level of safety and comfort for the traveling public. Repair, maintenance, and upgrading of roads will be placed on the detailed, itemized list of roads attached, as long-range planning requires. All other roadwork will be performed as needs arise and priorities change due to weather, traffic pattern shifts, request, and periodic inspection. As a result of this, needs and quantity of materials may vary from time to time.

The Board of Supervisors plan to raise the mills for the road department to 3 mills. This is to cover the cost of a $ 9 million dollar estimated cost to complete the 130 miles of road resurface and repairs. Some of this repair will be DBST and hot mix. Some roads will only have the worst segments of road done and others will be completely over-layed once the base repairs and leveling are done. All of the DBST work will be done in house, the hot mix overlay will be contracted work.

ROADS

STATE AID	COUNTY PAVED	GRAVEL & DIRT	TOTAL
146 mi.	980 mi.	8 mi.	988 mi.

STATE AID

State Aid Projects are construction projects approved and funded by the state through the Sate Aid Road Division. State Aid projects planned and projected for the near future are:

State-Aid Work To Be Contracted

NAME	DESCRIPTION OF WORK	LENGTH
Burnt Bridge Rd	Ultra Thin Overlay	3.39 mi
Oak Hill Rd	Ultra Thin Overlay	.18 mi
Spring Hill Rd	Ultra Thin Overlay	3.54 mi
John Amacker Rd	Reseal	.16 mi
Progress/Silver Run Rd	Reseal	9.78 mi
Spring Hill Rd	Reseal	2.90 mi
Gumpond Beall Rd	Reseal	7.44 mi
Ceasar Rd	Base Repair and Leveling	5.85 mi
West Union Rd	Base Repair and Leveling	8.18 mi
Rock Ranch Rd	Base Repair and Leveling	6.95 mi
Henleyfield McNeill Rd	Base Repair and Leveling	6.73 mi

GRAVEL AND DIRT

Approximately 75% of the 8 miles of gravel roads have a layer of clay gravel in various degrees of deterioration. To maintain these roads, gravel must be replaced or up-graded on an on-going basis as the need arises. Spot-drops of clay gravel or applications of washed gravel in certain areas generally maintain these roads in a passable condition. Based on historic use of this type of material, it is estimated 60 yards per mile of the 8 miles of gravel roads will be required to maintain these gravel roads in their current condition. Cost of material mined and transported with county equipment is approximately $7.50 per yard based on a 10-mile haul (the estimated cost varies with conditions.) Upgrading of Gravel and Dirt Roads to DBST Paved Roads is estimated to cost approximately $ 35,000 per mile, but can vary due to the level of road preparation required.

BRIDGES

There are a total of 150 bridges in the county.

BRIDGE REPLACEMENT AND REPAIRS

ROAD	PROJECT	EST. COST
Walkiah Bluff Rd	EFL-0055(32)BO	$364,919
Troy Dedeaux Rd	ERBR-55(02)	$323,006
Shorty Burgess Rd	LSBP-55(36)	$321,750
Pine Grove Rd	SAP-55(60)	$585,000
Anchor Lake Rd	SAP-55(24)M	$397,090
McNeill Steephollow Rd	ERBR-STP-BR-0055(30)B	$765,998
Lakeside Dr	LSBP-55(35)	$249,812
Nellie Burks Rd	LSBP-55(34)	$194,081
Silver Run Rd	ERBR-STP-0125(13)	$1,253,352
Anchor Lake Rd	SAP-55(59)	$412,200
McNeal McHenry Rd	ERBR-55(01)	$407,741

LABOR FORCE

At present, Pearl River County Road Department employs approximately 55 people. It is estimated that within four years , an additional 6 people will be required to staff this department.

YEAR	NO. OF EMPLOYEES
2020	55
2021	60
2022	66
2023	66

AMENDED ROAD PLAN PROJECTS FOR 2020-2023

The following are projects projected to be completed within the next 4 years. The priority for completing the projected projects is shown on the attached road assessment report.

OVERLAY

Derby-White Sand Rd

Dupont-Harts Chapel Rd

Frank Smith Rd

Glover Rd

Grady Lewis Rd

Grover Barrett Rd

Harry Sones Rd

Homer Ladner Rd

John Amacker Rd

Albert Prince Rd

Hoadley Rd

Hillsdale Rd

McCastile Rd

Otho Davis rd

Cypress Dr

Asa McQueen Rd

Charlie Walker Rd

George Walker Rd

Ginger St

Green Meadow Place Rd

Harvey Burkes Rd

Luther Davis Rd

OVERLAY CONT.

Holden Rd

Joe Stockstill Rd

Lake David Dr

Mitchell Chapel Rd

Old Camp Rd

S Valley Rd

Dumas Bailey Rd

Lavelle Ladner Rd

Redmond Rd

Savannah-Millard Rd

White Chapel Rd

George Mitchell Rd

J D Gill Rd

Lakeside Dr

Matthews Rd

Marcus Mitchell Rd

Moeller Rd

Bay Meadows Dr

Bellemeade Dr

Ben Gill Rd

Bloomingdale Dr

Bucaneer Cir

Cane Bend Dr

Dove Ridge Rd

Fred Johnson Rd

Gentle Breeze Dr

Heavenly Dr

Knoll Creek Dr

Lumpkin Rd

DBST-PAVEMENT

Beasley Alexander Rd

Cowart-Holiday Rd

E T Poole Rd

Frank Henry Rd

Hartfield Rd

JJ Holcomb Rd

Fox Run South

H K Lewis Rd

Humphrey Rd

Luther Wise Rd

N Valley Rd

Old Ness Plantation Rd

DBST-PAVEMENT CONT.

LaRow Dr

Albert Prince Rd

Anastasia Dr

Archie Wheat Rd

Ben Wilson Rd

Donley Burks Rd

Dumas Wise Rd

Argile Smith Rd

Aubrey Anderson Rd

Jess Williams Rd

Melton Smith Rd

Mill Creek Rd

Ovelle Lee Rd

Roadrunner Dr

Toxie Spence Rd

Hickory Grove Rd

Joe Smith Rd

Lamar Smith Rd

McNeill_McHenry Rd

Restertown Rd

Slick Lee Rd

Van Spence Rd

Emmett Meitzler Rd

Slick Lee Rd

Van Spence Rd

Olive Church Rd

Peach Tree Dr

Powell Rd

Quail Ct

S Valley Rd

Sam Smith Rd

Slade Woodward Rd

Virgil Mitchell Rd

Wise Landing Rd

A Stockstill Rd

Asa McQueen Rd

Joe Bennett Rd

Lovell Johnson Rd

Minnie Furr Rd

Foots Stevens Rd

Charles Toney Rd

Coleman Rd

Dupont-Harts Chapel Rd

Foots Stevens Rd

Hickory Grove Rd

Joe Smith Rd

Lamar Smith Rd

McNeill McHenry Rd

Hardy Williams Rd

Emmett Meitzler Rd

ESTIMATED EQUIPMENT REQUIREMENT

QTY.	DESCRIPTION	UNIT PRICE	TOTAL AMOUNT
1	Skid steer with millery head , (sweeper,roller,4n1 bucket)	$113,000	$113,000
1	Single axle dump truck	$100,000	$100,000
1	20ton tag a long equip trailer	$19,000	$19,000
2	Tandem dump trucks	$120,000	$240,000
1	Replace asphalt distributor truck	$178,000	$178,000

EQUIPMENT THAT NEEDS REPLACED

QTY	DESCRIPTION	UNIT PRICE	TOTAL AMOUNT
1	Pad foot roller	$110,000	$110,000
2	2500 Crew cab truck	$27,615	$55,230
1	3500 Crew cab truck	$29,100	$29,100
1	1500 Crew cab truck	$28,207	$28,207
2	Boom mowers	$ 124,000	$248,000
1	Front end loader	$ 175,000	$175,000
3	Bush hog tractors	$ 63,000	$ 189,000
4	20 ton tag along trailers	$ 19,000	$ 57,000

Minute Book Text Detail
Book 0216 Page 70 CORONER'S AGENDA ITEMS
Date 4/ 5/2021

ORDER TO APPROVE CORONER'S AGENDA ITEMS

There came on this day to be considered by the Board of Supervisors of Pearl River County, Mississippi, the matter of Coroner's Agenda Items.

Upon motion made by Jason Spence and seconded by Malcolm Perry, the following order was adopted, to-wit:

Be It Ordered by the Pearl River County Board of Supervisors to approve the following Coroner's Agenda Items as listed with attachments:

A. Appoint Pearl River County Coroner Pro Tempore for Hancock County Coroner Duties

B. Declare Virginia Bassett and Jacob Levron as Paupers and assist with cremation

Ordered and adopted, this the 5th day of April, 2021.

Voting AYE: Donald Hart, Malcolm Perry, Hudson Holliday, Jason Spence, and Sandy Kane Smith
Voting NAY: None

Theresa Ryan
District 1

Greg Shaw
District 2
Vice President

Kodie Koenenn
District 3

BOARD OF SUPERVISORS

Hancock County
854 Highway 90, Suite A
Bay St. Louis, MS 39520

Telephone (228) 467-0172
Fax (228) 466-5994

Scotty Adam
District 4
President

Darrin "Bo" Ladner
District 5

Gary Yarborough, Jr
Board Attorney

March 24, 2021

Pearl River County Board of Supervisors

200 South Main Street

Poplarville, MS 39470

Re: Appointing Pearl River County Coroner Pro Tempore for Hancock County Coroner Duties

Dear Supervisor Sandy Kane Smith,

Hancock County received notice on March 23, 2021 from the Mississippi Forensics Laboratory that The Hancock County Coroner's certification as County Medical Examiner Investigator has been suspended.

In accordance with Miss. Code §41-61-57(2) & (4), Hancock County respectfully requests your consent, along with the State Medical Examiner's office, for The Pearl River County Coroner, Mr. Derek Turnage, to serve as Pro Tempore Coroner for Hancock County until such time as a final outcome is reached in any ongoing investigation.

We appreciate any consideration you may give in this regard. If approved by you, please submit your consent back to us in writing so that we may provide all communications to the State Medical Examiner's office for their consideration.

Sincerely,

Scotty Adam

Scotty Adam, Board President
Hancock County Board of Supervisors

Office of the Coroner

PEARL RIVER COUNTY, MISSISSIPPI
P.O. Box 703 • 917 Goodyear Blvd. • Picayune, MS 39466
telephone 601-749-7750
fax 601-749-7751

DEREK TURNAGE
CORONER

000072

March 22, 2021

Board of Supervisors
Pearl River County
P.O. Box 569
Poplarville, MS. 39470

RE: Virginia Bassett
SS# 435-94-9912
D.O.D. 02/25/2021

To The Honorable Board of Supervisors:

We currently have the body of Virginia Bassett who died 02/25/2021. She lived at 21 Lang Drive, Picayune, Ms. There has been no follow up with the family and the next of kin has not followed up with any arrangements. I am asking at this time for the Board of Supervisors to consider Mrs. Virginias as a Pauper and to assist with cremation directed by McKneely and Son Funeral Home in Baton Rouge, La..

Thank you,

Derek Turnage,
Pearl River County Coroner

Office of the Coroner
PEARL RIVER COUNTY, MISSISSIPPI
P.O. Box 703 • 917 Goodyear Blvd. • Picayune, MS 39466
telephone 601-749-7750
fax 601-749-7751

DEREK TURNAGE
CORONER

March 24, 2021

Board of Supervisors
Pearl River County
P.O. Box 569
Poplarville, MS. 39470

RE: Jacob Levron
SS#
D.O.D. 03/23/2021

To The Honorable Board of Supervisors:

We currently have the body of Jacob Levron who died 03/23/2021. He lived at 132 Pearidge Rd, Picayune, Ms. I am asking at this time for the Board of Supervisors to consider Mr. Levron as a Pauper and to assist with cremation directed by Pinehaven Funeral Home and Crematory.

Thank you,

Derek Turnage,
Pearl River County Coroner

ORDER TO APPROVE CHANCERY CLERK'S AGENDA ITEMS

There came on this day to be considered by the Board of Supervisors of Pearl River County, Mississippi, the matter of Chancery Clerk's Agenda Items.

Upon motion made by Donald Hart and seconded by Malcolm Perry, the following order was adopted, to-wit:

Be It Ordered by the Pearl River County Board of Supervisors to approve the following Chancery Clerk's Agenda Items as listed with attachments:

A. Personnel:

Allison McCormick	Transfer from Tax Collector's Office to the Chancery Clerk's Office as full-time deputy clerk

B. Accept 2020 Annual Financial Report and issue payment to the Public Employees Retirement System (PERS)

Ordered and adopted, this the 5th day of April, 2021.

Voting AYE: Donald Hart, Malcolm Perry, Hudson Holliday, Jason Spence, and Sandy Kane Smith
Voting NAY: None

MELINDA SMITH BOWMAN
PEARL RIVER COUNTY CHANCERY CLERK

April 5, 2021

Pearl River County
Board of Supervisors

Gentlemen:

I would like spread on the minutes that Allison McCormick has transferred from the Tax Collector's Office to the Chancery Clerk's Office as a full-time deputy clerk beginning April 1, 2021.

Sincerely,
Melinda Bowman
Melinda Bowman

200 SOUTH MAIN STREET ❖ P.O. BOX 431 ❖ POPLARVILLE, MS 39470 ❖ (601) 403-2316 ❖ FAX: (601) 403-2317

000076

MELINDA SMITH BOWMAN
PEARL RIVER COUNTY CHANCERY CLERK

April 5, 2021

Pearl River County Board of Supervisors
RE: Chancery Clerk 2020 Annual Financial Report and Request for PERS Contribution

Gentlemen:

I am releasing a copy of my 2020 Annual Financial Report that will be submitted to the Mississippi Office of the State Auditor. I request this body to authorize payment of $1,575 to the Public Employees Retirement System (PERS) for the Employer Contribution on the remaining portion of my salary not received through the payroll system for Calendar Year 2020. That amount equates to the 17.40 percent of my final draw of $9,049.46. My nine percent personal contribution to PERS is $814.

As always, I appreciate your leadership to our county.

Many thanks,

Melinda Bowman

Melinda Bowman

200 SOUTH MAIN STREET ❖ P.O. BOX 431 ❖ POPLARVILLE, MS 39470 ❖ (601) 403-2316 ❖ FAX: (601) 403-2317

Annual Financial Report

Statement of gross receipts from all sources accruing as compensation to the office and disbursements occurring as necessary expenses involved solely in complying with laws governing the office.

000077

Please type or print in ink. Round to nearest whole dollar. X **Original** ____ **Amended #** ____

MANDATORY TO COMPLETE NAME AND CONTACT INFORMATION

Chancery Clerk			
COUNTY:	Pearl River	Calender Year: 2020	
NAME:	Melinda Bowman		
ADDRESS:	100 S. Main St. Poplarville, MS 39470	LAST 4 OF SSN:	6343
DAYTIME TELEPHONE:	601-403-2316	ALTERNATE PHONE NUMBER:	601-403-2315

PART I - REVENUES SUBJECT TO THE SALARY LIMITATION (§ 9-1-43)		
County Payroll Income (matched by the county through payroll)		
1	Attending Board Meetings	$660.00
2	Clerk of the Board	$3,000.00
3	Court Per Diem	$67,472.00
4	County Treasurer	$2,500.00
5	County Auditor	$5,300.00
6	Copying Tax Rolls	
7	Services not Otherwise Provided	$5,000.00
8	Youth Court	$
9	Other : Homestead	$1,519.00
10	Subtotal County Payroll Income (add lines 1 through 9)	$85,451.00
Fee Income (not matched by the county)		
11	Lunacy	$
12	Mineral Lease Commissions	$47.00
13	Fees - Land Sale, Delinquent Taxes, Redistricting	$312,572.00
14	Recording, Filing, Indexing, Copies 338210 recording + 41507 (copies)	$379,717.00
15	Other : Child Support-6924; MEC-3461; Appeals-1038; Bank Interest-4641	$16,064.00
16	Subtotal Fee Income (add lines 11 through 15)	$708,400.00
17	**Total Revenues Subject to Salary Limitation (add lines 10 and 16)**	$793,851.00

PART II - EXPENSES (§ 9-1-43)		
18	Wages (including family members within the first degree)	$240,293.00
19	Prior Year Employer Retirement Contribution on Wages for Clerk (if not paid by Board- Should be line 20 on page 3 from your 2019 AFR)	
20	Employer Retirement Contribution on Employee Wages	$40,072.00
21	Employer Social Security/Medicare Contribution on Employee Wages	$18,300.00
22	Employer Insurance on Employees	$
23	Accounting	$
24	Legal	$
25	Travel	$2,137.00
26	Bank Charges	$
27	Insurance	$
28	Professional Fees	$31,258.00
29	Office Expenses	$45,990.00
30	Supplies	$1,267.00
31	Other : cell phone	$1,070.00
32	Other :	$
33	**Total Expenses (add lines 18 to 32)**	$380,387.00

PART III - REVENUES NOT SUBJECT TO THE SALARY LIMITATION (§ 9-1-43)
(Place a "P" on a line to indicate county payroll income)

34	Homestead Services	$ .00
35	Record Restoration	$ .00
36	Purchase Clerk	$ .00
37	County Administrator	$ .00
38	Comptroller/Bookkeeper	$ .00
39	Other :	$ .00
40	Other:	$ .00
41	Interest Earned on Fee Account	$ .00
42	Other :	$ .00
43	**Total Revenues Not Subject to Salary Limitation (add lines 34 to 42)**	$0.00 .00

PART IV - EXPENSES FOR REVENUE NOT SUBJECT TO SALARY LIMITATION

44	Wages	$ .00
45	Supplies	$ .00
46	Office Expenses	$ .00
47	Professional Fees	$ .00
48	Other:	$ .00
49	Other:	$ .00
50	**Total Expenses (add lines 44 to 49)**	$0.00 .00

Wages Paid to Family Members Within the First Degree

Name	Relationship	Social Security #	Date of Hire	Wages Paid
				$ .00
				$ .00
				$ .00
				$ .00
Total Wages Paid to Family Members Within the First Degree				$ .00

Retirement Contributions Calculation - Revenues Subject to the Salary Limitation

1	Total Revenues Subject to Salary Limitation of $94,500.00 (page 1, line 17)	$793,851.00
2	Less Expenses (page 1, line 33)	$380,387.00
3	Net Income Subject to Salary Limitation (line 1 minus line 2)	$413,464.00
4	Plus: Wages Paid to Family Members Within the First Degree	$0.00
5	Total Revenue Subject to Salary Limitation	$413,464.00
6	Less: Salary Limitation	$94,500.00
7	Amount Due to County (line 5 minus line 6 if greater than zero)	$318,964.00

000078

00007:

Retirement Contributions Calculation		
8	Amount on line 5 NOT TO EXCEED $94,500	$94,500.00
9	Less: Wages Paid to Family Members Within the First Degree	$
10	Clerk's Retirement Wage on Income Subject to Limitation (line 8 minus line 9)	$94,500.00
11	Revenues Not Subject to the Salary Limitation (page 2, line 43)	$
12	Less: Expenses (line 50)	$
13	**Net Revenues Not Subject to the Salary Limitation**	$0.00
14	Total Clerk's Retirement Wage (line 10 plus line 13, not to exceed $282,500)	$94,500.00
15	Employee Contributions Due (9% of line 14)	$8,505.00
16	Less: Contributions Paid to PERS for Employee Share through Monthly Reports on Payroll Income	$7,691.00
17	Net Employee Contributions Due (NOT A FEE JOURNAL DEDUCTION)	$814.00
18	Employer Contributions Due (17.4% of line 14)	$16,443.00
19	Less: Contributions paid to PERS for Employer Share through Monthly Reports on Payroll Income	$14,868.00
20	Net Employer Contributions Due (FEE JOURNAL DEDUCTION FOR 2021 OR MAY BE PAID BY BOARD OF SUPERVISORS)	$1,575.00
	Check if paid by: Clerk ☐ Board X	
21	TOTAL CONTRIBUTIONS DUE (line 17 plus line 20)	$2,389.00
22	Less: Adjustments or Advance Payments made by the Clerk- funds submitted with current AFR. NOT additional funds submitted by the Clerk	$
23	NET CONTRIBUTIONS DUE	$2,389.00

THIS FORM MUST BE FILED WITH THE OFFICE OF THE STATE AUDITOR, P.O. BOX 956, JACKSON MS, 39205, BY APRIL 15, 2021. A copy of this form along with any payment due should be sent to PERS, Employer Reporting Branch, 429 Mississippi Street, Jackson, MS 39201-1005. If you amend your federal tax return, you must file an amended Annual Financial Report with the Office of the State Auditor and with PERS.

I certify the above information is true and correct.

Melinda Bowman

Chancery Clerk: Date: 4/5/2021

Minute Book Text Detail
Book 0216 Page 80 CIRCUIT CLERK AGENDA ITEMS
Date 4/ 5/2021

ORDER TO APPROVE CIRCUIT CLERK'S AGENDA ITEMS

There came on this day to be considered by the Board of Supervisors of Pearl River County, Mississippi, the matter of Circuit Clerk's Agenda Items.

Upon motion made by Donald Hart and seconded by Hudson Holliday, the following order was adopted, to-wit:

Be It Ordered by the Pearl River County Board of Supervisors to approve the following Circuit Clerk's Agenda Items as listed with attachements:

A. Accept 2020 Annual Financial Report and issue payment to the Public Employees Retirement System (PERS)

B. Circuit Court Order Appointing and Setting Salary for Official Court Reporter - Rose Sanchez

Ordered and adopted, this the 5th day of April, 2021.

Voting AYE: Donald Hart, Malcolm Perry, Hudson Holliday
Jason Spence, and Sandy Kane Smith
Voting NAY: None

NANCE FITZPATRICK STOKES

PEARL RIVER COUNTY CIRCUIT CLERK

Post Office Box 530, Poplarville, MS 39470-0530

(601) 403-2328 · Fax (601) 403-2327

nstokes@pearlrivercounty.net

March 19, 2021

Pearl River County Board of Supervisors
Post Office Box 569
Poplarville, Mississippi 39470

Re: Annual Financial Report for 2020

Gentlemen:

Enclosed please find the 2020 Annual Financial Report for the Circuit Clerk's Office and Check #5207 in the amount of $194,618.00

I respectfully request that the Board of Supervisors pay the contributions due PERS in the amount of $2,930.00.

If you have any questions, or need any additional information, please do not hesitate to contact me.

Thank you for your consideration in this regard.

Sincerely,

Nance F Stokes

Nance Fitzpatrick Stokes
Circuit Clerk

/ns

Enclosures

NANCE FITZPATRICK STOKES

PEARL RIVER COUNTY CIRCUIT CLERK

Post Office Box 530, Poplarville, MS 39470-0530

(601) 403-2328 · Fax (601) 403-2327

nstokes@pearlrivercounty.net

March 19, 2021

Office of the State Auditor
Post Office Box 956
Jackson, Mississippi 39205

Re: Annual Financial Report for 2020

To Whom It May Concern:

Enclosed please find the 2020 Annual Financial Report for Nance Fitzpatrick Stokes, Circuit Clerk of Pearl River County.

If you have any questions, or need any additional information, please do not hesitate to contact me.

Thank you for your consideration in this regard.

Sincerely,

Nance F Stokes

Nance Fitzpatrick Stokes
Circuit Clerk

/ns

Enclosure

cc: Pearl River County Board of Supervisors

NANCE FITZPATRICK STOKES

PEARL RIVER COUNTY CIRCUIT CLERK

Post Office Box 530, Poplarville, MS 39470-0530

(601) 403-2328 · Fax (601) 403-2327

nstokes@pearlrivercounty.net

March 19, 2021

PERS
Employer Reporting Branch
429 Mississippi Street
Jackson, Mississippi 39201-1005

Re: Annual Financial Report for 2020

To Whom It May Concern:

Enclosed please find the 2020 Annual Financial Report for Nance Fitzpatrick Stokes, Circuit Clerk of Pearl River County.

If you have any questions, or need any additional information, please do not hesitate to contact me.

Thank you for your consideration in this regard.

Sincerely,

Nance Fitzpatrick Stokes
Circuit Clerk

/ns

Enclosure

cc: Pearl River County Board of Supervisors

000084

Annual Financial Report

Statement of gross receipts from all sources accruing as compensation to the office and disbursements occurring as necessary expenses involved solely in complying with laws governing the office.

Please type or print in ink. Round to nearest whole dollar. _X_ **Original** ____ **Amended #** ____

MANDATORY TO COMPLETE NAME AND CONTACT INFORMATION

Circuit Clerk

COUNTY: Pearl River Calender Year: 2020

NAME: Nance Fitzpatrick Stokes

ADDRESS: P. O. Box 530, Poplarville, MS 39470-0530 LAST 4 OF SSN: 0396

DAYTIME TELEPHONE: 601-403-2322 ALTERNATE PHONE: 601-916-7266

PART I - REVENUES SUBJECT TO THE SALARY LIMITATION (§ 9-1-43)

County Payroll Income (matched by the county through payroll)		
1	County Registrar	$24,150.00
2	Conducting Elections	$2,500.00
3	Assisting Election Commissioners	$10,000.00
4	Court Per Diem	$135,084.00
5	State Fail Cases	$400.00
6	Allowance for Deputy Hire	
7	Grand Jury Docket	
8	Fees Not Otherwise Provided	
9	Other : Public Service	$5,000.00
10	Subtotal County Payroll Income (add lines 1 through 9)	$177,134.00
Fee Income (not matched by the county)		
11	Court Costs, Transcripts	$88,274.00
12	Marriages	$7,228.00
13	Copies, etc.	$16,363.00
14	Commissions on Money Received	
15	Other : Expungements, Garnishments, Judgments	$22,849.00
16	Subtotal Fee Income (add lines 11 through 15)	$134,714.00
17	**Total Revenues Subject to Salary Limitation (add lines 10 and 16)**	$311,848.00

PART II - EXPENSES (§ 9-1-43)		
18	Bank Service Charges	$11.00
19	Depreciation	
20	Dues and Publications	$1,874.00
21	Insurance	
22	Professional Fees	$850.00
23	Office Expenses	$15,841.00
24	Supplies	$2,471.00
25	Travel	
26	Business Meals and Entertainment	$1,683.00
27	Employee Wages (including family members within the first degree)	
28	Prior Year Employer Retirement Contribution on Wages for Clerk (if not paid by Board	
	Should be line 20 on page 3 of your 2019 AFR)	
29	Employer Retirement Contribution on Employee Wages	
30	Employer Social Security/Medicare on Employee Wages	
31	Employer Insurance on Employees	
32	Other :	
33	Other :	
34	**Total Expenses (add lines 18 to 33)**	$22,730.00

PART III - REVENUES NOT SUBJECT TO THE SALARY LIMITATION (§ 9-1-43)
(Place a "P" on a line to indicate county payroll income)

35	Interest Earned on Fee Account	$73.00
36	Criminal Records Searches	$660.00
37	Passport Agent Fees	$4,331.00
38	Setting Up/Programming Voting Machines	$5,900.00
39	Assisting Supervisors in Implementing Redistricting Plans	
40	Other : Administrative Fee - Intervention Court	$135.00
41	Other :	
42	**Total Revenues Not Subject to Salary Limitation (add lines 35 to 41)**	$11,099.00

PART IV - EXPENSES RELATED TO REVENUES NOT SUBJECT TO THE SALARY LIMITATION

43	Supplies	$
44	Employee Wages	$
45	Other :	$
46	Other :	$
47	**Total Expenses (add lines 43 to 46)**	$

Wages Paid to Family Members Within the First Degree

Name	Relationship	Social Security #	Date of Hire	Wages Paid
				$
				$
				$
				$
Total Wages Paid to Family Members Within the First Degree				$

Retirement Contributions Calculation - Revenues Subject to the Salary Limitation

1	Total Revenues Subject to Salary Limitation of $94,500.00 (page 1, line 17)	$311,848.00
2	Less Expenses (page 1, line 34)	$22,730.00
3	Net Income Subject to Salary Limitation (line 1 minus line 2)	$289,118.00
4	Plus: Wages Paid to Family Members Within the First Degree	
5	Total Revenue Subject to Salary Limitation	$289,118.00
6	Less: Salary Limitation	$94,500.00
7	Amount Due to County (line 5 minus line 6 if greater than zero)	$194,618.00

Retirement Contributions Calculation - Revenues Not Subject to the Salary Limitation		
8	Amount on line 5 NOT TO EXCEED $94,500	$94,500.00
9	Less: Wages Paid to Family Members Within the First Degree	
10	Clerk's Retirement Wage on Income Subject to Limitation (line 8 minus line 9)	$94,500.00
11	Revenues Not Subject to the Salary Limitation (page 2, line 42)	$11,099.00
12	Less Expenses (line 47)	
13	Net Income Not Subject to Salary Limitation (Line 11 minus line 12)	$11,099.00
14	Total Clerk's Retirement Wage (line 10 plus line 13, not to exceed $282,500)	$105,599.00
15	Employee Contributions Due (9% of line 14)	$9,504.00
16	Less: Contributions Paid to PERS for Employee Share through Monthly	$8,505.00
	Reports on Payroll Income	
17	Net Employee Contributions Due (NOT A FEE JOURNAL DEDUCTION)	$999.00
18	Employer Contributions Due (17.4% of line 14)	$18,374.00
19	Less: Contributions paid to PERS for Employer Share through Monthly	$16,443.00
	Reports on Payroll Income	
20	Net Employer Contributions Due (FEE JOURNAL DEDUCTION FOR 2021 OR	$1,931.00
	MAY BE PAID BY BOARD OF SUPERVISORS)	
	Check if paid by: Clerk ☐	
	Board ☒	
21	TOTAL CONTRIBUTIONS DUE (line 17 plus line 20)	$2,930.00
22	Less: Adjustments or Advance Payments made by the Clerk-Funds	
	submitted with current AFR. NOT additional funds submitted by the Clerk	
23	NET CONTRIBUTIONS DUE	$2,930.00

THIS FORM MUST BE FILED WITH THE OFFICE OF THE STATE AUDITOR, P.O. BOX 956, JACKSON MS, 39205, BY APRIL 15, 2021. A copy of this form along with any payment due should be sent to PERS, Employer Reporting Branch, 429 Mississippi Street, Jackson, MS 39201-1005. If you amend your federal tax return, you must file an amended Annual Financial Report with the Office of the State Auditor and with PERS.

I certify the above information is true and correct.

Circuit Clerk: Nance F. Stokes Date: 3/19/2021

000087

5207

85-587/655

NANCE FITZPATRICK STOKES
PEARL RIVER COUNTY CIRCUIT CLERK
FEE ACCOUNT
P.O. BOX 530, (601)403-2328
POPLARVILLE, MS 39470

FIRST NATIONAL BANK
POPLARVILLE, MS 39470

CHECK ARMOR TRADE PROTECTION

3/19/2021

Pearl River County

**194,618.00

DATE AMOUNT

One Hundred Ninety-Four Thousand Six Hundred Eighteen and 00/100**********

PAY TO THE ORDER OF

Pearl River County
P. O. Box 569
Poplarville, MS 39470

Nance F Stokes

AUTHORIZED SIGNATURE

2020 Annual Financial Report

⑈005207⑈ ⑆065505870⑆ 180 601 7⑈

MATTHEW O'QUAIN
STAFF ATTORNEY

ALEX PARKER SHOEMAKER
COURT ADMINISTRATOR

JUDGE PRENTISS G. HARRELL
FIFTEENTH CIRCUIT COURT DISTRICT
SERVING JEFFERSON-DAVIS, LAMAR, LAWRENCE, MARION & PEARL RIVER COUNTIES

March 24, 2021

Pearl River County Board of Supervisors
Post Office Box 569
Poplarville, MS 39470-0569

Dear Board of Supervisors:

Kimme Roberts resigned as Official Court Reporter for the 15th Circuit Court District, effective December 31, 2020. Rose Sanchez will be filling the open position, effective April 1, 2021. Due to her limited years of experience as a court reporter, Ms. Roberts received a base salary of $43,500, plus benefits. However, Ms. Sanchez has over fifteen years of court reporting experience and has been an Official Court Reporter for the 13th Circuit Court District for several years. As such, she is qualified to receive a base salary of $64,000.00, plus benefits, which is the same salary that the other two Official Court Reporters in our district earn. Upon approval from the Board of Supervisors, Pearl River County will contribute 33% of the increase, which is estimated to be $8,490.65 per year.

Please sign below and return to Judge Harrell's office; I have included a self-addressed, pre-paid envelope for your convenience. Should you have any questions, please do not hesitate to contact my office.

Sincerely,

Prentiss Harrell

Prentiss G. Harrell
Senior Circuit Court Judge

PGH/aps

The undersigned hereby acknowledges the county's contribution to the salary referenced above.

Pearl River County Board of Supervisors

NANCE FITZPATRICK STOKES

PEARL RIVER COUNTY CIRCUIT CLERK

Post Office Box 530, Poplarville, MS 39470-0530
(601) 403-2328 · Fax (601) 403-2327
nstokes@pearlrivercounty.net

March 30, 2021

Pearl River County Board of Supervisors
Post Office Box 569
Poplarville, Mississippi 39470

Re: Rose Sanchez

Gentlemen:

Enclosed please find a certified copy of the Order Appointing and Setting Salary for Official Court Reporter dated March 18, 2021.

If you have any questions, please do not hesitate to call.

Thank you for your consideration in this regard.

Sincerely,

Nance Fitzpatrick Stokes
Circuit Clerk

/ns

Enclosure

IN THE FIFTEENTH CIRCUIT COURT DISTRICT OF MISSISSIPPI,

COMPRISED OF

JEFFERSON DAVIS, LAMAR, LAWRENCE, MARION, AND PEARL RIVER COUNTIES

ORDER APPOINTING AND SETTING SALARY FOR OFFICIAL COURT REPORTER

BEFORE THE COURT is the matter of appointing an Official Court Reporter for the 15th Circuit Court District. Upon the resignation of Kimme Roberts from her position as Official Court Reporter on December 31, 2020, the Court sought applicants and conducted interviews for the open position. The Court finds that Rose Sanchez is an experienced court reporter who is wholly qualified to fill the position.

The undersigned Circuit Judge Prentiss Harrell, being the senior Circuit Judge for the Fifteenth Circuit Court District, hereby appoints Rose Sanchez to fill the position of Official Court Reporter effective April 1, 2021. Her salary is hereby set at $64,000.00 *per annum* – based upon the number of years of experience set out in Section 9-13-19 of the Miss. Code Ann. (West) -- plus benefits, which shall be prorated amongst the counties in the district as follows:

Jefferson Davis County	11%
Lamar County	28%
Lawrence County	11%
Marion County	17%
Pearl River County	33%

FILED
NANCE FITZPATRICK STOKES
CIRCUIT CLERK
MAR 29 2021
BY: Nance F Stokes
DEPUTY CLERK

IT IS FURTHER ORDERED that this order be spread on the minutes of the counties of the 15th Circuit Court District and copies delivered to the respective Board of Supervisors of each county and to the Administrative Office of Courts.

SO ORDERED, this the 18th day of March, 2021.

CERTIFIED TRUE COPY
This 19th day of March 2021
Martin Hankins, Circuit Clerk
Lamar County, Mississippi
By

FILED
LAMAR COUNTY MAR 19 2021 CIRCUIT CLERK

PRENTISS HARRELL,
SENIOR CIRCUIT JUDGE

CERTIFY THIS IS A TRUE AND CORRECT COPY O
THE ORIGINAL ON FILE IN MY OFFICE.
This 30 day of March 2021
Nance Fitzpatrick Stokes
Pearl River County Circuit Clerk
By: Nance F Stokes
Deputy Clerk

Minute Book Text Detail
Book 0216 Page 91 HEALTH DEPARTMENT EMERGENCY PURCHASE
Date 4/ 5/2021 QUOTES FOR CHILLER

ORDER TO ACCEPT EMERGENCY PURCHASE QUOTES FOR CHILLER
AT HEALTH DEPARTMENT

There came on this day to be considered by the Board of Supervisors of Pearl River County, Mississippi, the matter of chiller system at Health Department.

Upon motion made by Hudson Holliday and seconded by Donald Hart, the following order was adopted, to-wit:

Be It Ordered by the Pearl River County Board of Supervisors to accept attached emergency purchase quotes for chiller system at Health Department and proceed with purchase with lowest quote of Mechanical Services, LLC.

Ordered and adopted, this the 5th day of April, 2021.

Voting AYE: Donald Hart, Malcolm Perry, Hudson Holliday, Jason Spence, and Sandy Kane Smith
Voting NAY: None

SANDY KANE SMITH
President, District Five
MALCOLM PERRY
Vice-President, District Two
DONALD HART
District One

PEARL RIVER COUNTY
MISSISSIPPI
Est. 1890

HUDSON HOLLIDAY
District Three
JASON SPENCE
District Four
MELINDA BOWMAN
Clerk of Board

BOARD OF SUPERVISORS
PEARL RIVER COUNTY
P.O. BOX 569
POPLARVILLE, MS 39470
(601) 403-2300
(601) 403-2309 Fax
ADRAIN LUMPKIN, JR.
County Administrator

March 30, 2021

Board of Supervisors,

Please consider the attached emergency quotes for the Chiller System at the Pearl River County Health Department. We have received two quotes, one form Mechanical Services, LLC and one from Universal Services, LLC. We have had a Mechanical Engineer review the quotes for us and we recommend going with the lowest quote of Mechanical Services, LLC.

Universal Services, LLC.	$185,500.00
Mechanical Services, LLC	$106,383.00

Thanks,

Adrain

Mechanical Services, LLC

214 Camellia Street, Suite 1, Waveland, MS 39576 * Phone: 228-463-1771 * Fax: 228-466-6249

PROPOSAL & CONTRACT AGREEMENT

March 18, 2021

General Contractor/Customer:
Pearl River County
Attn: Derek Perry
7547 Highway 11
Carrier, MS
Phn: 601-813-7878
Email: dperry@pearlrivercounty.net

Subcontractor/Service Provider:
Mechanical Services, LLC
Attn: Ryan Halvin
214 Camellia Street, Suite 1
Waveland, MS 39576
Cell: 228-234-5429
Email: rhalvin@mechanicalbalanceandrepair.com

Project: Pearl River Health Dept
Location: 7547 Highway 11, Carrier, MS

Mechanical Services, LLC will provide the services described below:

To furnish the tools and labor to replace with a Carrier 30RAPchiller.

Lump sum price of $84,883.00
Add ALT 1: $6,500.00 for complete building Test and Balance (EF's, VAV's, Grille Balance, and AHU's set up to original design Outside Air and supply) and Chemical treatment during system flush and strainer cleaning.
Add ALT 2: $15,000.00 storage tank option

- Based on site walk.
- We will provide crane and rigging.
- We will provide a direct Carrier Replacement Chiller Carrier 30RAP.
- We will provide start up to manufactures standards.
- We will disconnect and reconnect piping and insulate new piping.
- We will remove old equipment from site.
- We will disconnect and reconnect the power and controls.
- We will clean and do a PM on the AHU's.
- We will pull and clean all strainers up to 3 times to remove all sediment in the system after chemical treatment.
- We will provide Test and Balance on the new chiller and pump.
- Chiller led time is 10 weeks could be less. Chiller rental is $2,000.00 add per week.
- See attached control scope of work.

This agreement is the property of Mechanical Services, LLC and is provided for customers use only. Mechanical Services, LLC guarantees the price stated in this agreement for thirty (30) days from proposal date. Upon execution as provided below, this agreement, including the following pages attached hereto shall become binding and enforceable against both parties hereto. Customer, by execution of this agreement, acknowledges that it has reviewed and understands the attached terms and conditions and has the authority to enter into this agreement.

Mechanical Services, LLC

Signature: _____

Name: _____

Title: _____

Date: _____

Pearl River County

Signature: _____

Name: _____

Title: _____

Date: _____

Below is our proposal to furnish DDC controls:

- Work to be performed during normal business hours
- Warranty
- Customer training

Graphics

- Work with onsite IT department to obtain IP addresses for all networked devices (field panels and computer)
- Provide and install network cable from computer to port designated by onsite IT department
- Computer is provided by IT department
- Provide graphics package for AHU's, VAV's
- Provide graphics package for floorplans
- Set up trends applicable to installed database
- Provide customer training

Air Handlers (2)

- **Update controls and failed device for a complete DDC control package on VAV air handler's**
- **Verify proper operation of the Air Handler I/O**
  - supply fan array stop/start
  - supply fan array speed signal
  - supply fan array alarm
  - High-static safety shutdown
  - Filter dp
  - Low temperature detector
  - Supply temp sensor
  - Outside air and supply air damper actuators

Chiller Package (1)

- **Update controls and failed device for a complete DDC control package for new chiller package**

VAV's – Electric reheat

- **Provide new BACnet vav controller and discharge air sensor**
  - Provide and install combination room temp with display, override, and set point adjustment

Exclusions and Clarifications

No OCIP/CCIP. (Owner/Contractor Controlled Insurance Program)

No Performance and Payment Bonds Included

Smoke detectors are existing

Motor starters are existing

Control dampers / smoke dampers are existing

Variable Frequency Drives are existing

Mechanical Services, LLC

214 Camellia Street, Suite 1, Waveland, MS 39576 * Phone: 228-463-1771 * Fax: 228-466-6249

Contract Agreement
Terms and Conditions

1. Customer shall permit Service provider free and timely access to areas and equipment, and allow Service Provider to start and stop the equipment as necessary to perform required service. All planned work shall be performed during the Service Providers normal working hours.

2. In case of any failure to perform its obligations under this agreement, Service Provider's liability is limited to repair or replacement at its option and such repair or the replacement shall be the Customer's sole remedy.

3. Customer shall be responsible for any taxes applicable to the services and/or materials hereunder.

4. Customer will promptly pay invoices within thirty (30) days of invoice date.

5. Any alteration to, or deviation from, this Agreement involving extra work, cost of materials or labor will become an extra charge (fixed price amount to be negotiated or on a time-and-material basis at Service Provider's rates then in effect) over the sum of the stated agreement.

6. Service Provider will not be required to move, replace or alter any part of the building structure in the performance of this agreement.

7. Customer shall permit only Service Provider's personnel or agent to perform the work included in the scope of this Agreement. Should anyone other than the Service Provider's personnel perform such work, Service Provider may, at its own option, cancel this Agreement or eliminate the involved item from inclusion in this Agreement.

8. In the event Service Provider must commence legal action in order to recover any amount payable under this agreement, customer shall pay Service Provider all court costs and attorneys' fees incurred by Service Provider.

9. Any legal action against the service Provider relating to this Agreement, or the breach thereof, shall be commenced within one (1) year from the date of work.

10. Service Provider shall not be liable for any delay, loss, damage or detention caused by unavailability of machinery, equipment or materials, action of the elements, forces of nature, or by any cause beyond its control.

11. Customer shall make available to Service Provider's personnel all pertinent Material Safety Data Sheets (MSDS) pursuant to OSHA'S Hazard Communication Standard Regulations.

12. Service Provider expressly disclaims any and all responsibility and liability for indoor air quality of the customer's facility, including without limitation injury or illness to occupants of the facility or third parties, arising out of or in connection with the Service Provider's work under this Agreement.

Universal Services, LLC
1241 Highway 63 North, MS 39451
860 Larson St Jackson, MS 39202
Phone (601) 965-5834 • Fax (601) 394-2424 • tim@rms-ms.com

Proposal

Proprietary and Confidential Property of Universal Services, LLC.
Distribution to other than the named recipient is prohibited

To:	Derek Perry	Date:	3/12/2021
	Pearl River County	Proposal No:	TR2890
		Fax:	
	Re: Pearl River County – Health Department	Phone:	601-403-2300

Universal Services LLC is pleased to provide the following proposal for your consideration.

Proposed Project Scope:

Base Bid: Chiller and Controls

Provide and install (1) Trane 40-ton air cooled chiller.

Chiller Specs:
40 nominal tons
208 volt 3 phases 60 Hertz
Refrigerant isolation valves (discharge valve)
Factory installed flow switch for 100% Water Std cooling (40 to 65F)
Grooved pipe connection
Factory insulation 0.75"
Performance based on water
Standard Ambient Range
Copper tubes with Lanced aluminum fins
Across the line starter/direct online
Single point power connection
Terminal block conn for incoming lines
Enclosure type UL 1995 rated for outdoor applications BACnet comm. Card
Factory Mounted Pump Package
Dual High head pumps (75' available head)
Variable Speed Drive Pump control 1st year parts and labor warranty whole unit

Provide and install (1) Trane Building Automation System.

Web-Based BAS System:
(1) Tracer SC+ building controller with enclosure and applicable licenses
Controller will utilize wired BACNet MSTP and Trane Air Fi communication links
BACNet MSTP Link #1: New comm link wire to chiller comm card and UC400 at chiller
IMC Link #1: 24V and wireless comm to (4) wireless coordinators
Coordinate with IT Department for IP address assignment and access parameters
Secure remote access via Trane Connect is requested - Owner version of this portal is included and will be setup by Trane
System access on Trane mobile app for unlimited number of mobile devices is included
Provide equipment, floor plan, and chilled water system, system graphics
Includes 1-yr software maintenance plan for Tracer SC+ controller
Control system programming, startup, and commissioning

Chilled Water System Controls:
Install new BACNet MSTP comm link wiring from Tracer SC+ to chiller yard
Install UC400 in chiller control panel
Install CT on each pump in pump package and connect to UC400
New chilled water supply and return temp sensors at chiller yard Chilled water flow switch to be factory mounted
Pump start/stop controls via chiller comm card
Install OA temp and humidity station at chiller and connect to UC400

Universal Services, LLC
1241 Highway 63 North, MS 39451
860 Larson St Jackson, MS 39202
Phone (601) 965-5834 • Fax (601) 394-2424 • tim@rms-ms.com

Constant Volume AHU Controls (Total 1):
All existing devices and wiring to remain in service (except as noted below) and be connected to new controller
Existing control panel enclosure and power supply to remain in service
Connection to existing smoke detectors and fire alarm system to remain in service
UC600 BACNet controller
Chilled water control valve
Wall temp sensor with occupant adjustment and override

Variable Volume AHU Controls (Total 1):
All existing devices and wiring to remain in service (except as noted below) and be connected to new controller
Existing control panel enclosure and power supply to remain in service
Connection to existing smoke detectors and fire alarm system to remain in service
Field provided and installed:
UC600 BACNet controller
Chilled water control valve

Existing VAV Box Controls (Total 28):
Existing metal enclosure and SCR electric heat controls to remain in service
Wiring between existing VAV and wall temp sensor to remain in service
UC210 BACNet controller and actuator
Wireless communication interface
Supply duct temperature sensor
Wall temp sensor with occupant adjustment and override

We shall furnish as specified above for the sum of: ***Base Bid: $185,500.00***
Performance and Payment Bonds included.
All taxes and permits included.

Alternate: (1) AHU Replacement
Provide and install (1) Trane Air Handling Unit:
Unit size 30 – 15,000 cfm, 1.50 " ESP
6in. integral base frame
Unit ships in 3 pieces – see submittal for details
Air mixing section (Pos #1)
Door- right side
Back damper - opposed blade
Top damper - opposed blade
2in. angled filter frame with 1 set filters
Coil section (Pos #2)
Chilled Water Coil
8 rows
Fan section (Pos #3)
Door- right side
Direct Drive Plenum fan
Factory mounted VFD (right side) Voltage 200-208/3
15 hp fan motor
Front rectangular discharge

We shall furnish as specified above for the sum of: ***Alternate: $53,000.00***
Performance and Payment Bonds included.
All taxes and permits included.

Universal Services, LLC

1241 Highway 63 North, MS 39451
860 Larson St Jackson, MS 39202
Phone (601) 965-5834 • Fax (601) 394-2424 • tim@rms-ms.com

Not included:
Buffer tanks or other chilled water related components not listed in scope.
Insulation of chiller water items not modified during construction.
Any fire alarm of life safety devices.

Exclusions: Special delivery, labor or other request not listed in project scope. Parts and materials found defective during project not listed in project scope. Warranty on items not furnished by Universal Services.

Terms: Pricing valid for 60 Days. Net 30 Days on all invoices.

Acceptance: Thank you for the opportunity to provide this proposal. If you have any questions or need further assistance, please feel free to call. We would appreciate your signature as acceptance of this proposal.

Authorizing Signature

Universal Services LLC
601-965-5834 Office
601-966-8452 Mobile
tim@rms-ms.com

Minute Book Text Detail
Book 0216 Page 99 RESOLUTIONS TO REFINANCE THE ANNEX BOND
Date 4/ 5/2021

ORDER TO APPROVE ALL REQUIRED RESOLUTIONS NECESSARY TO REFINANCE THE COURTHOUSE ANNEX BOND AND AUTHORIZE BOARD PRESIDENT TO EXECUTE ALL DOCUMENTS

There came on this day to be considered by the Board of Supervisors of Pearl River County, Mississippi, the matter to refinance the Courthouse Annex Bond.

Upon motion made by Hudson Holliday and seconded by Malcolm Perry, the following order was adopted, to-wit:

Be It Ordered by the Pearl River County Board of Supervisors to adopt attached RESOLUTION OF THE BOARD OF SUPERVISORS OF PEARL RIVER COUNTY, MISSISSIPPI AUTHORIZING AND DIRECTING THE ISSUANCE OF NOT TO EXCEED $11,700,000 PEARL COUNTY, MISSISSIPPI GENERAL OBLIGATION REFUNDING BONDS, SERIES 2021, FOR THE PURPOSE OF PROVIDING FUNDS TO CURRENT REFUND AND DEFEASE CERTAIN OUTSTANDING INDEBTEDNESS OF THE COUNTY; PRESCRIBING THE FORM AND DETAILS OF THE BONDS; AUTHORIZING THE PLACEMENT AND SALE OF THE BONDS; APPROVING THE FORM OF AND THE EXECUTION AND DELIVERY OF DOCUMENTS IN CONNECTION WITH THE ISSUANCE, PLACEMENT AND THE SALE OF THE BONDS; AND FOR RELATED PURPOSES.

To Be Further Ordered to approve all required Resolutions necessary to refinance the Courthouse Annex Bond and authorize Board President to execute all documents.

Ordered and adopted, this the 5th day of April, 2021.

Voting AYE: Donald Hart, Malcolm Perry, Hudson Holliday, Jason Spence, and Sandy Kane Smith
Voting NAY: None

The Board of Supervisors (the "Governing Body") of Pearl River County, Mississippi (the "County"), took up for consideration the matter of refunding certain prior bonds of the County, and after a discussion of the subject matter, Supervisor Holliday offered and moved the adoption of the following resolution:

RESOLUTION OF THE BOARD OF SUPERVISORS OF PEARL RIVER COUNTY, MISSISSIPPI AUTHORIZING AND DIRECTING THE ISSUANCE OF NOT TO EXCEED $11,700,000 PEARL COUNTY, MISSISSIPPI GENERAL OBLIGATION REFUNDING BONDS, SERIES 2021, FOR THE PURPOSE OF PROVIDING FUNDS TO CURRENT REFUND AND DEFEASE CERTAIN OUTSTANDING INDEBTEDNESS OF THE COUNTY; PRESCRIBING THE FORM AND DETAILS OF THE BONDS; AUTHORIZING THE PLACEMENT AND SALE OF THE BONDS; APPROVING THE FORM OF AND THE EXECUTION AND DELIVERY OF DOCUMENTS IN CONNECTION WITH THE ISSUANCE, PLACEMENT AND THE SALE OF THE BONDS; AND FOR RELATED PURPOSES.

WHEREAS, the Governing Body, acting for and on behalf of the County, is authorized by the Mississippi Bond Refinancing Act, being Sections 31-27-1 *et seq.*, Mississippi Code of 1972, as amended and supplemented (the "Refinancing Act"), to issue refunding bonds of the County for the purpose of refinancing outstanding indebtedness of the County at more favorable interest rates, provided, among other things, that such refinancing results in net present value savings to maturity of not less than two percent (2%) of the bonds being refinanced; and

WHEREAS, the Governing Body, acting for and on behalf of the County, previously authorized the issuance of its $11,044,000 Pearl River County, Mississippi General Obligation Bond, Series 2018, dated September 14, 2018 (the "2018 County Bond") to the Mississippi Development Bank for the purpose of pFroviding money to the County for general public improvements throughout the County as described in the County's Bond Resolution dated June 4, 2018 which authorized the issuance of the 2018 County Bond and provided the security therefor (the "2018 Bond Resolution"); and

WHEREAS, to provide funds for its purchase of the 2018 County Bond, the Mississippi Development Bank issued its $11,044,000 Mississippi Development Bank Special Obligation Bonds, Series 2018 (Pearl River County, Mississippi General Obligation Bond Project), dated September 14, 2018 (the "2018 Bonds"); and

WHEREAS, the 2018 Bonds were issued by the Mississippi Development Bank pursuant to Sections 31-25-1 *et seq.*, (the "Bank Act") and Section 19-9-1 *et seq.* (the "County Act," and together with the Bank Act, the "Act"), Mississippi Code of 1972 as amended and supplemented, and an Indenture of Trust dated as of September 14, 2018 (the "2018 Trust Indenture"), between the Mississippi Development Bank and Hancock Whitney Bank, as trustee (in such capacity, the "2018 Trustee"); and

WHEREAS, the 2018 Bond Resolution provides that the repayment terms and conditions of the 2018 County Bond are the same repayment terms and conditions of the 2018 Bonds as stated therein and in the 2018 Indenture; and

WHEREAS, the County is desirous of refunding all or a portion of the outstanding 2018 Bonds and corresponding amount of the 2018 County Bond for interest rate savings; and

WHEREAS, long-term interest rates in the tax-exempt bond market are presently favorable to such a refunding; and

WHEREAS, the Refinancing Act authorizes such refunding bonds to be secured by a pledge of the same source of security or such other security as the Governing Body may lawfully pledge, or both; and

WHEREAS, it has been determined that all or a portion of the outstanding maturities of the 2018 Bonds maturing November 1, 2022 through and including November 1, 2040 and a corresponding amount of the 2018 County Bond (collectively, the "Refunded Bonds"), are candidates for being refunded under the Refinancing Act; and

WHEREAS, pursuant to the Refinancing Act, the Refunded Bonds can be legally or economically defeased; and

WHEREAS, the Refinancing Act authorizes the Governing Body, among other things, to provide for the terms and details of such refunding bonds, to sell such refunding bonds at public or private sale (which sale shall be on such terms and in such manner as the Governing Body shall determine to be in the County's best interest), to make arrangements for the retirement of the Refunded Bonds and to make all other arrangements relating to such refunding bonds; and

WHEREAS, after careful study and investigation by the County, it appears to be in the best interest of its the citizens to issue Not to Exceed $11,700,000 Pearl County, Mississippi General Obligation Refunding Bonds, Series 2021 (the "Bonds"), that will to provide funds (i) to finance the current refunding and defeasance of all or a portion of the outstanding Refunded Bonds (which includes the simultaneous prepayment of an equal amount of the 2018 County Bond) (the "Refunding Project"); and (ii) paying the costs of issuance of the Bonds (together (i) through (ii) constitute the "2021 Project") pursuant to the Act; and

WHEREAS, the Governing Body has determined that the sale the Bonds through private sale as authorized by the Refinancing Act will provide the Governing Body with the greatest degree of flexibility in the marketing of such refunding bonds and will ensure the most favorable long term interest rates and will thereby maximize the interest savings for the County; and

WHEREAS, the Bonds will be placed by Raymond James, Inc., Memphis, Tennessee, as placement agent (the "Placement Agent"), pursuant to the terms and provisions of a Private Placement Agreement, to be dated as of the date of the placement and sale of the Bonds, between the County and the Placement Agent (the "Private Placement Agreement"); and

WHEREAS, the County has been presented with a Term Sheet, dated March 22, 2021 (the "Term Sheet"), from Capital One Public Funding, LLC (the "Purchaser") for the placement

of the Bonds by the Placement Agent and desires to authorize the President or Vice President of the Governing Body to execute the Term Sheet subject to the recommendation of Government Consultants Inc., Madison, Mississippi, as independent registered municipal advisor for the County (the "Municipal Advisor"); and

WHEREAS, there have been submitted to this meeting, among other documents, forms of:

(a) the Private Placement Agreement providing for the placement of the Bonds by the Placement Agent of the sale of the Bonds to the Purchaser, and

(b) the Term Sheet providing for the terms and conditions for the sale of the Bonds to the Purchaser; and

WHEREAS, it appears that each of the documents above referred to, which documents are now before the Governing Body, is in appropriate form and is an appropriate document for the purposes identified; and

WHEREAS, all conditions, acts and things required by the Refinancing Act and the Constitution and laws of the State of Mississippi (the "State") to have existed, to have happened and to have been performed precedent to and in connection with the adoption of this resolution, the sale and issuance of such refunding bonds have happened and have been performed in regular and due time, form and manner as required by law; and

WHEREAS, it is proposed that the Governing Body should take all such additional actions, authorize the execution of such documents and certificates and authorize such other actions and proceedings as shall be necessary in connection with the sale and issuance of the Bonds and the refunding and defeasance of the Refunded Bonds, including, without limitation, the execution and delivery by the President of the Governing Body (the "President"), the Chancery Clerk of the County (the "Clerk"), and any other member of the Governing Body (each of the President, the Clerk and the other members of the Governing Body being hereinafter referred to as an "Authorized Officer" or "Authorized Officers," as the case may be, of the County), for and on behalf of the County, as provided herein, of the Bonds, documents, certificates and other instruments required to complete the issuance, sale and placement of the Bonds; and

WHEREAS, the assessed value of all taxable property within the County, according to the last completed assessment for taxation, is Four Hundred Thirty-Two Million Five Hundred Eighteen Thousand Nine Hundred Fifty-One Dollars is ($432,518,951), and the issuance of the Bonds proposed to be issued pursuant to the Act, when added to the outstanding bonded indebtedness of the County, will not result in bonded indebtedness that exceeds the limitations of applicable constitutional or statutory limitation upon indebtedness which may be incurred by the County.

NOW, THEREFORE, BE IT RESOLVED BY THE BOARD OF SUPERVISORS OF THE COUNTY, ACTING FOR AND ON BEHALF OF THE COUNTY, AS FOLLOWS:

SECTION 1. This resolution is adopted pursuant to the Act and other applicable laws of the State and all matters and things recited in the premises and preamble of this resolution are found and determined to be true and accurate.

SECTION 2. Proceeding under the authority of the Refinancing Act, there shall be and there are hereby authorized and directed to be issued Pearl River County, Mississippi General Obligation Refunding Bonds, Series 2021 (the "Bonds") in an aggregate principal amount not to exceed Eleven Million Seven Hundred Thousand Dollars ($11,700,000). The Bonds are being issued to currently refund and defease all or a portion of the Refunded Bonds and to pay certain costs incident to the sale, issuance and delivery of the Bonds. Principal and interest on the Bonds shall be payable on such dates, at such rate and in such amounts as provided in the Private Placement Agreement, which provisions shall be finalized on the date the Private Placement Agreement is executed by the Placement Agent and the County.

SECTION 3. The Governing Body hereby finds and determines that (a) the Refinancing Act provides that the Bonds may be secured by a pledge of the same source of security as the Refunded Bonds, or such other security as the Governing Body may lawfully pledge, or both; (b) the net proceeds of the Bonds shall be applied to the refunding and defeasance of the Refunded Bonds and the payment of the costs of issuance related to the Bonds; (c) the Bonds shall not be issued unless all of the requirements of the Refinancing Act and other applicable laws of the State are met, including without limitation, the requirement of at least a two percent (2%) net present value savings for the Refunded Bonds; (d) pursuant to the Refinancing Act, the Bonds shall be general obligations of the County and the full faith, credit and resources of the County are hereby pledged for the payment of the principal of and interest on the Bonds; (e) the aggregate principal amount of the Bonds shall not exceed $11,700,000; and (f) the Bonds shall not bear a greater overall maximum interest rate to maturity than eleven percent (11%) per annum as allowed by the Refinancing Act.

SECTION 4. (a) Due to the character of the Bonds, the complexity of structuring the Bonds and prevailing market conditions, the Bonds shall be sold through a private placement transaction to the Placement Agent. The President, acting for and on behalf of the County, is hereby authorized and directed to negotiate with the Placement Agent for the sale of the Bonds to the Purchaser and to make the final decisions regarding (i) the aggregate principal amount of the Bonds, (ii) the redemption provisions of the Bonds, (iii) the interest rates to be borne by the Bonds, (iv) the maturity date of the Bonds, (v) the specific maturities of the Refunded Bonds to be refinanced with a portion of the proceeds of the Bonds, (vi) the principal and interest payment dates for the Bonds, and (vii) to make all final determinations necessary to structure the Bonds. The form of the Private Placement Agreement attached hereto as **EXHIBIT A** as submitted to this meeting and made a part of this resolution as though set forth in full herein shall be, and the same hereby is, approved in substantially said form. The President and the Clerk are hereby authorized and directed to execute and deliver the Private Placement Agreement with such changes, insertions and omissions as may be approved by such officer, said execution being conclusive evidence of such approval.

(b) The Bonds shall be (i) issued in the principal denominations of $100,000 and increments of $1,000 each thereafter, or integral multiples thereof up to the amount of a single maturity, (ii) shall be subject to redemption in the manner, to the extent and with such notice as

stated in the Private Placement Agreement, (iii) shall be delivered to the Purchaser upon payment of the purchase price therefor in accordance with the terms and conditions of the Private Placement Agreement, (iv) shall be authenticated and delivered to, upon the order of or as directed by the Purchaser thereof upon payment of the purchase price of the Bonds in accordance with the Private Placement Agreement, and (v) may or may not have CUSIP numbers assigned thereto as specified in the Private Placement Agreement.

(c) The County hereby authorized and approved the appointment of Raymond James & Associates, Inc., Memphis, Tennessee, as placement agent regarding the placement of the Bonds.

(d) The sale of the Bonds to Capital One Public Funding, LLC, as Purchaser, is approved, and the Term Sheet in substantially the form attached hereto as **EXHIBIT B** is approved and the execution thereof by the President approved with such changes, insertions and omissions as may be approved by such officer, said execution being conclusive evidence of such approval.

(e) In the event the Purchaser does not purchase the Bonds, the Governing Body hereby approves and authorizes the Placement Agent, the Municipal Advisor and the President to negotiate for the placement and sale of the Bonds upon such terms consistent with the provisions of the resolution.

(f) If in the opinion of Municipal Advisor and/or the Placement Agent, it is in the best interest of the County to sell the Bonds in a public offering transaction and to distribute an offering memorandum, official statement or other disclosure document in connection with the sale of the Bonds, the Governing Body of the County hereby authorizes Bond Counsel and the Placement Agent, acting in such event in a role as underwriter, to provide distribution of any such offering document in connection with the sale of the Bonds, and authorizes the President and the Clerk to execute a bond purchase agreement in connection with the sale of the Bonds provided the parameters in this Bond Resolution are met.

SECTION 5. (a) In consideration of the purchase and acceptance of any and all of the Bonds by the registered owners thereof, this resolution shall constitute a contract between the County and the registered owners from time to time of the Bonds. The pledge made herein and the covenants and agreements herein set forth to be performed on behalf of the County shall be for the equal benefit, protection and security of the registered owners of any and all of the Bonds, all of which, regardless of the time or times of their authentication and delivery or maturity, shall be of equal rank without preference, priority or distinction.

(b) The Bonds shall be general obligations of the County, and the full faith, credit and resources of the County are hereby irrevocably pledged for the payment of the principal of and interest on the Bonds. For the purposes of effectuating and providing for the payment of the principal of and interest on the Bonds, as the same shall respectively mature and accrue, there shall be and is hereby levied a direct, continuing special tax upon all of the taxable property within the geographical limits of the County, adequate and sufficient, after allowance shall have been made for the expenses of collection and delinquencies in the payment of taxes, to produce sums required for the payment of the principal of and the interest on the Bonds, in accordance with the provisions of this resolution. The County's tax levy for any year shall be abated pro tanto to the extent the County on or prior to September 1 of that year has transferred monies to

the 2021 Bond Fund for the Bonds, or has made other provisions for funds to be applied toward the payment of the principal of and interest on the Bonds due during the ensuing fiscal year of the County, in accordance with the provisions of this resolution. Said tax shall be extended upon the tax rolls and collected in the same manner and at the same time as other taxes of the County are collected, and the rate of tax which shall be so extended shall be sufficient in each year fully to produce the sums required as aforesaid, without limitation as to rate or amount. The avails of said tax are hereby irrevocably pledged for the payment of the principal of and interest on the Bonds as the same shall respectively mature and accrue. Should there be a failure in any year to comply with the requirements of this Section 5(b), such failure shall not impair the right of the registered owners of any of the Bonds in any subsequent year to have adequate taxes levied and collected to meet the obligations of the Bonds, both as to principal and interest.

SECTION 6. (a) The Bonds shall be dated the date of their delivery and shall bear interest from said date at the rates per annum to be set forth in the Private Placement Agreement, as the case may be; provided, however, that the Bonds shall not bear a greater overall maximum interest rate to maturity than eleven percent (11%) per annum as allowed by the Refinancing Act, and shall mature no later than November 1, 2040, in the years and in the principal amounts to be set forth in the Private Placement Agreement, as the case may be.

(b) The Bonds shall be fully registered bonds as to principal and interest and issued in the denominations of $100,000 and $1,000 increments thereafter, or any integral multiple thereof and shall be numbered separately from 1 upwards without regard to maturity.

(c) The Bonds (i) shall be delivered to the Purchaser upon payment of the purchase price therefor in accordance with the terms and conditions of the Private Placement Agreement, (ii) shall be authenticated and delivered to, upon the order of or as directed by the Purchaser thereof upon payment of the purchase price of the Bonds in accordance with the Private Placement Agreement, and (iii) may or may not have CUSIP numbers assigned thereto as specified in the Private Placement Agreement.

SECTION 7. Unless otherwise specified in the Private Placement Agreement, the Bonds shall not be held or registered in a book-entry system.

SECTION 8. (a) In the event the Bonds are held under a book-entry system, transfers of beneficial ownership of the Bonds will be affected pursuant to rules and procedures established by the Securities Depository. For purposes of this resolution, "Securities Depository" shall mean a recognized securities depository (or its successor or substitute) selected by the County to act as the securities depository maintaining a book-entry transfer system for the Bonds.

(b) As long as a book-entry system is in effect for the Bonds, the Securities Depository Nominee will be recognized as the registered owner of the Bonds for the purpose of (i) paying the principal of or interest on such Bonds, (ii) giving any notice permitted or required to be given to registered owners of the Bonds under this resolution, (iii) registering the transfer of such Bonds, and (iv) requesting any consent or other action to be taken by the registered owners of such Bonds, and for all other purposes whatsoever, and neither the County nor the Paying and Transfer Agent (as hereinafter defined) shall be affected by any notice to the contrary. For the purposes of this resolution, "Securities Depository Nominee" shall mean, with

respect to the Bonds and as to any Securities Depository, such Securities Depository or the nominee of such Securities Depository in whose name the Bonds shall be registered on the registration records of the County maintained by the Paying and Transfer Agent pursuant to Section 16 hereof during the time such Bonds are held under a book-entry system through such Securities Depository.

(c) Neither the County nor the Paying and Transfer Agent shall have any responsibility or obligation to any participant, any beneficial owner or any other person claiming a beneficial ownership in any Bonds which are registered to a Securities Depository Nominee under or through the Securities Depository with respect to any action taken by the Securities Depository as registered owner of such Bonds.

(d) The Paying and Transfer Agent shall pay all principal of and interest on the Bonds issued under the book-entry system, only to the Securities Depository, or the Securities Depository Nominee, as the case may be, for such Bonds, and all such payments shall be valid and effectual to fully satisfy and discharge the obligations with respect to the principal of and interest on such Bonds.

(e) In the event that the Governing Body determines that it is in the best interest of the County to discontinue the book-entry system of transfer for the Bonds, or that the interests of the beneficial owners of the Bonds may be adversely affected if the book-entry system is continued, then the County shall notify the Securities Depository and the Paying and Transfer Agent of such determination. In such event, the County shall execute and the Paying and Transfer Agent shall, pursuant to subsequent resolution of the Governing Body, authenticate, register and deliver physical certificates for the Bonds in exchange for the Bonds registered in the name of the Securities Depository. Such certificates shall be in fully registered form and transferable only upon the registration records of the County maintained by the Paying and Transfer Agent, by the registered owner thereof or by such registered owner's attorney, duly authorized in writing, upon surrender thereof, together with a written instrument of transfer satisfactory to the Paying and Transfer Agent, duly executed by the registered owner or such registered owner's duly authorized attorney in accordance with this resolution.

(f) In the event that the Securities Depository for the Bonds discontinues providing its services, the County shall either engage the services of another Securities Depository or deliver physical certificates in the manner described in subparagraph (e) above.

(g) In connection with any notice or other communication to be provided to the registered owners of the Bonds by the County or by the Paying and Transfer Agent with respect to any consent or other action to be taken by the registered owners, the County or the Paying and Transfer Agent, as the case may be, shall establish a record date for such consent or other action and give the Securities Depository Nominee notice of such record date not less than fifteen (15) days in advance of such record date to the extent possible.

(h) If required by the Private Placement Agreement, the Bonds be issued initially under the book-entry system maintained by The Depository Trust Company, New York, New York ("DTC") and shall be registered in the name of Cede & Co., as the initial Securities Depository Nominee for the Bonds. As long as the Bonds are maintained by DTC under its

book-entry system, all payments with respect to the principal of and interest on the Bonds and notices shall be made and given, respectively, to DTC.

SECTION 9. The Bonds may be subject to redemption, optional, mandatory, or otherwise, prior to their respective maturities as provided in the Private Placement Agreement, as the case may be, which redemption provisions shall be finalized on the date of the Private Placement Agreement, as the case may be, is executed by the Placement Agent and the County.

SECTION 10. The principal of said Bonds shall be payable in lawful money of the United States of America upon presentation and surrender thereof as the same shall become due at a bank or banks within or without the State (the "Paying and Transfer Agent"). The President is hereby authorized and directed to appoint a commercial bank or banks which is a member of the Federal Deposit Insurance Corporation to serve as Paying and Transfer Agent for the Bonds; provided, however, Hancock Whitney Bank shall serve as initial Paying and Transfer Agent. Interest will be payable by check or draft drawn upon the Paying and Transfer Agent, made payable to the registered owner named in, and mailed to the address of the registered owner as it shall appear on, the registration records of the County maintained by the Paying and Transfer Agent for the Bonds pursuant to the provisions of Section 16 hereof.

SECTION 11. [RESERVED].

SECTION 12. The County hereby covenants as follows:

(a) It has not abandoned, sold or otherwise disposed of any facility, equipment or improvement financed or refinanced directly or indirectly with the proceeds of the Refunded Bonds;

(b) It does not intend to, during the term that any of the Bonds allocable to the Refunding Project are outstanding, abandon, sell or otherwise dispose of any facility, equipment or improvement financed or refinanced directly or indirectly with the proceeds of the Refunded Bonds;

(c) It shall timely file with the Ogden, Utah Service Center of the Internal Revenue Service, such information report or reports as may be required by Section 148(f) and 149(e) of the Code;

(d) It shall take no action that would cause the Bonds to be "federally guaranteed" within the meaning of Section 149(b) of the Code;

(e) It will not employ an abusive arbitrage device in connection with the issuance by it of the Bonds which will enable it to obtain a material financial advantage (based on arbitrage) apart from the savings that may be realized as a result of the lower interest rates on the Bonds than on the Refunded Bonds and overburden the tax-exempt bond market;

(f) The amount of "excess gross proceeds", as such term is defined in Income Tax Regulation § 1.148-10(c)(2), of the Bonds allocable to the 2021 Project will not exceed one percent (1%) of the proceeds received from the sale thereof; and

(g) It shall make, or cause to be made, the rebate required by Section 148(f) of the Code in the manner described in Regulation §1.148-0 through 1.148-11, 1.149(b)-1, 1.149(d)-1, 1.149(g)-1, 1.150-1, 1.150-2, as such regulations and statutory provisions may be modified insofar as they apply to the Bonds.

SECTION 13. The County covenants to comply with each requirement of the Internal Revenue Code of 1986, as amended (the "Code"), necessary to maintain the exclusion of interest on the Bonds from gross income for federal income tax purposes, and in furtherance thereof, to comply with a certificate to be executed and delivered concurrently with the issuance of the Bonds, or such other covenants as may, from time to time, be required to be complied with in order to maintain the exclusion of interest on the Bonds from gross income for federal income tax purposes. The County shall not use or permit the use of any of the proceeds of the Bonds, or any other funds of the County, directly or indirectly, to acquire any securities, bonds or other investment property, and shall not take or permit to be taken any other action or actions, which would cause any Bond to be an "arbitrage bond" as defined in Section 148 of the Code. Notwithstanding any other provisions to the contrary, so long as necessary in order to maintain the exclusion of interest on the Bonds from gross income for federal income tax purposes under the Code, the covenants contained in this section shall survive the payment of the Bonds and the interest thereon, including any payment or defeasance thereof.

SECTION 14. Pursuant to the authority granted by the Act and the Registered Bond Act, being Sections 31-21-1 *et seq.*, Mississippi Code of 1972, as amended (the "Registered Bond Act"), the Bonds shall be executed by the manual or facsimile signature of the President and the official seal of the County shall be affixed or lithographed or otherwise reproduced thereon, attested by the Clerk and the Bonds shall be authenticated by the Paying and Transfer Agent. The Paying and Transfer Agent shall authenticate each Bond by executing the Paying and Transfer Agent's Certificate thereon and no Bond shall be valid or become obligatory for any purpose until such certificate shall have been duly executed by the Paying and Transfer Agent. Such certificate, when duly executed on behalf of the County, shall be conclusive evidence that the Bond so authenticated has been duly authenticated and delivered. The validation certificate, for which provision is hereinafter made, to appear on each Bond, shall be executed by the Clerk and said certificate may be executed by the manual or facsimile signature of the Clerk. The Bonds shall be delivered to the Purchaser upon payment of the purchase price therefor in accordance with the terms and conditions of this resolution and the Private Placement Agreement, together with a complete certified transcript of the proceedings had and done in the matter of the authorization, sale, issuance and validation of the Bonds, and the final, unqualified approving opinion of Bond Counsel (as hereinafter defined). Prior to or simultaneously with the delivery by the Paying and Transfer Agent of any of the Bonds, the County shall file with the Paying and Transfer Agent: (a) a copy, certified by the Clerk, of the transcript of proceedings of the County in connection with the authorization, sale, issuance and validation of the Bonds, and (b) an authorization to the Paying and Transfer Agent, signed by the President and/or the Clerk, to authenticate and deliver the Bonds to the Purchaser. The Paying and Transfer Agent is authorized and directed to authenticate the Bonds and deliver them to the Purchaser upon payment of the purchase price of the Bonds to the County in accordance with this resolution and the Private Placement Agreement. Certificates, blank as to denomination, rate of interest, date of maturity and CUSIP number, if so required, and sufficient in quantity in the judgment of the County to meet the reasonable transfer and reissuance needs of the Bonds, shall be printed and

delivered to the Paying and Transfer Agent, and held by the Paying and Transfer Agent until needed for transfer or reissuance, whereupon the Paying and Transfer Agent shall imprint the appropriate information as to denomination, rate of interest, date of maturity and CUSIP number, if any, prior to the registration, authentication and delivery thereof to the transferee holder. The Paying and Transfer Agent is hereby authorized upon the approval of the County to have printed from time to time as necessary additional certificates bearing the facsimile seal of the County and facsimile signatures of the persons who were the officials of the County as of the date of original issue of the Bonds. When the Bonds shall have been executed as herein provided, they shall be registered as an obligation of the County in a record maintained for that purpose. The Clerk shall cause to be imprinted upon each Bond, over their facsimile signature and facsimile seal, a certificate certifying that the Bonds have been validated which certificate shall be in substantially the form set out on the form of the Bonds in **EXHIBIT C** hereof.

SECTION 15. The form of the Bonds, the certificate to appear on the Bonds and the Paying and Transfer Agent's Certificate shall be in substantially the form attached hereto as **EXHIBIT C** and the President be and is hereby authorized and directed to make such changes, insertions and omissions therein as may in the President's opinion be required.

SECTION 16. The Governing Body hereby adopts, pursuant to the authority granted by the Act and the Registered Bond Act, the following conditions (the "Conditions") which are to apply to the transfer, exchange and replacement of the Bonds, and other similar matters.

CONDITIONS AS TO THE ISSUANCE, TRANSFER, EXCHANGE AND REPLACEMENT OF THE BONDS

"Paying and Transfer Agent" as used in these Conditions means, as to Bonds designated herein, the bank or banks designated by action of the Governing Body as the Paying and Transfer Agent with respect to the Bonds and whose duties and responsibilities shall be as further limited or set forth in the form of Bonds for such issue of Bonds and by Section 8 of this resolution.

The principal of all Bonds shall be payable at the corporate trust office of the Paying and Transfer Agent, and payment of the interest on each Bond shall be made by the Paying and Transfer Agent on each interest payment date to the person appearing on the registration records of the County (hereinafter provided for) as the registered owner thereof as of the close of business on the date which shall be the fifteenth (15th) day (whether or not a business day) of the calendar month next preceding such interest payment date, by check or draft mailed to such registered owner at such registered owner's address as it appears on such registration records. Payment of the principal of all Bonds shall be made upon the presentation and surrender for cancellation of such Bonds as the same shall become due and payable.

Bonds, upon surrender thereof at said corporate trust office of the Paying and Transfer Agent with a written instrument of transfer satisfactory to such Paying and Transfer Agent duly executed by the registered owner or such registered owner's authorized attorney, may be exchanged for Bonds of like series, maturity

and interest rate of any other authorized denominations. Each such Bond shall be dated as of the date six (6) months preceding the interest payment date thereon next following the date of delivery of such Bond in registered form, unless such date of delivery shall be an interest payment date in which case it shall be dated as of such date of delivery, and every such Bond in registered form shall bear interest from its date.

So long as the Bonds shall remain outstanding, the County shall cause the Paying and Transfer Agent to maintain and keep, at its corporate trust office, registration records for the registration and transfer of Bonds, and, upon presentation thereof for such purpose at such corporate trust office, the County shall cause the Paying and Transfer Agent to register or cause to be registered thereon, and permit to be transferred thereon, under such reasonable regulations as the Paying and Transfer Agent may prescribe, any Bond. So long as any of the Bonds remain outstanding, the County shall make all necessary provisions to permit the exchange of Bonds at the corporate trust office of the Paying and Transfer Agent.

All Bonds shall be transferable only upon the registration records which shall be kept for that purpose at the corporate trust office of the Paying and Transfer Agent for the County, by the registered owner thereof in person or such registered owner's authorized attorney, upon surrender thereof, together with a written instrument of transfer satisfactory to the Paying and Transfer Agent, duly executed by the registered owner or such registered owner's authorized attorney, and upon such transfer there shall be issued in the name of the transferee a new Bond or Bonds in registered form of the same series in the same aggregate principal amount and of like maturity and interest rate as the Bond or Bonds surrendered. Bonds issued in connection with transfers shall be dated in the same manner provided above for the dating of Bonds issued in connection with exchanges.

Neither the County nor the Paying and Transfer Agent shall be required (a) to exchange or transfer Bonds for a period of fifteen (15) days next preceding an interest payment date on the Bonds or next preceding any selection of Bonds to be redeemed or thereafter until the first mailing of any notice of redemption, or (b) to transfer or exchange any Bond called for redemption.

All Bonds surrendered in any exchanges or transfers shall forthwith be canceled by the Paying and Transfer Agent and thereafter transmitted to the County.

Prior to the issuance or delivery of any Bond, whether upon original issuance, transfer, exchange or replacement, the Paying and Transfer Agent shall manually execute the certificate of authentication provided thereon. No Bond shall be valid or obligatory for any purpose until such certificate of authentication shall have been duly executed by the Paying and Transfer Agent. Such certificate of the Paying and Transfer Agent upon any Bond executed on behalf of the County shall be conclusive evidence that the Bond so authenticated has been duly authenticated and delivered.

Bonds bearing the facsimile signature of any person who shall have been the President or Clerk at the time such Bonds were originally dated or delivered by the County shall bind the County notwithstanding the fact that he or she may have ceased to be such officer prior to the delivery of such Bonds or was not such officer at the date of such Bonds.

Except as otherwise required by law, if (a) any mutilated Bond is surrendered to the Paying and Transfer Agent at its corporate trust office, or the Paying and Transfer Agent receives evidence to its satisfaction of the destruction, loss or theft of any Bond and (b) there is delivered to the Paying and Transfer Agent such security and/or indemnity as may be required by it to save harmless the County and the Paying and Transfer Agent, and as otherwise required by law, then, in the absence of notice to the Paying and Transfer Agent that such Bond has been acquired by a bona fide purchaser as such term is defined in the Uniform Commercial Code as it is then in effect in the State, the Paying and Transfer Agent shall authenticate and deliver, in exchange for any such mutilated Bond, or in lieu of any such destroyed, lost or stolen Bond, a new Bond of like tenor and principal amount, bearing a number not contemporaneously outstanding. The Paying and Transfer Agent shall thereupon cancel any Bond so surrendered.

In case any mutilated, destroyed, lost or stolen Bond has become or is about to become due and payable, the Paying and Transfer Agent in its discretion may, instead of issuing a new Bond, pay such Bond.

Each new Bond issued pursuant to this Section in lieu of any surrendered, destroyed, lost or stolen Bond shall constitute an additional contractual obligation of the County and shall be entitled to all benefits equally and proportionately with any and all other Bonds duly issued. All Bonds shall be held and owed upon the express condition that the foregoing provisions are exclusive with respect to the replacement or payment of mutilated, destroyed, lost or stolen Bonds, and shall preclude (to the extent lawful) all other rights or remedies with respect to the replacement or payment of mutilated, destroyed, lost or stolen Bonds or securities.

Notwithstanding the foregoing provisions of these Conditions, no Bonds shall be exchanged for other Bonds or be registered or transferred or issued or delivered by or on behalf of the County or the Paying and Transfer Agent pursuant to this Section at the request of a holder or owner of a Bond, except upon payment to such Paying and Transfer Agent by or on behalf of such holder or owner of a charge sufficient to reimburse the County and such Paying and Transfer Agent for any tax, fee, or other governmental charge required to be paid with respect to the transaction.

The County and the Paying and Transfer Agent may treat and consider the person in whose name any Bond shall be registered upon the registration records as herein provided as the holder and absolute owner thereof, whether such Bond shall be overdue or not, for the purpose of receiving payment of the principal thereof and interest thereon and for all other purposes whatsoever; provided,

however, payment of, or on account of, the principal of and interest on such Bond shall be made only to, or upon the order of, such registered owner, and such payment so made shall be valid and effective to satisfy and discharge the liability upon such Bond to the extent of the sum or sums so paid, and neither the County nor any Paying and Transfer Agent shall be affected by any notice to the contrary.

SECTION 17. (a) So long as any of the Bonds shall remain outstanding, the County shall maintain with the Paying and Transfer Agent separate records for the registration and transfer of the Bonds. The Paying and Transfer Agent is hereby appointed registrar for the Bonds, in which the County the Paying and Transfer Agent shall register in such records and permit to be transferred thereon, under such reasonable regulations as may be prescribed, any Bond entitled to registration or transfer.

(b) The County shall pay or reimburse the Paying and Transfer Agent for reasonable fees for the performance of the services normally rendered and the incurring of normal expenses reasonably and necessarily paid as are customarily paid to paying agents, transfer agents and bond registrars, subject to agreement between the County and the Paying and Transfer Agent. Fees and reimbursements for extraordinary services and expenses, so long as not occasioned by the negligence, misconduct or willful default of the Paying and Transfer Agent, shall be made by the County on a case-by-case basis, subject, where not prevented by emergency or other exigent circumstances, to the prior written approval of the Governing Body.

(c) (1) A Paying and Transfer Agent may at any time resign and be discharged of its duties and obligations as Paying and Transfer Agent, by giving at least sixty (60) days written notice to the County, and may be removed as Paying and Transfer Agent at any time by resolution of the Governing Body delivered to the Paying and Transfer Agent. The resolution shall specify the date on which such removal shall take effect and the name and address of the successor Paying and Transfer Agent, and shall be transmitted to the Paying and Transfer Agent being removed within a reasonable time prior to the effective date thereof. Provided, however, that no resignation or removal of a Paying and Transfer Agent shall become effective until a successor Paying and Transfer Agent has been appointed pursuant to this resolution.

(2) Upon receiving notice of the resignation of the Paying and Transfer Agent, the County shall promptly appoint a successor Paying and Transfer Agent by resolution of the Governing Body. Any appointment of a successor Paying and Transfer Agent shall become effective upon acceptance of appointment by the successor Paying and Transfer Agent. If no successor Paying and Transfer Agent shall have been so appointed and have accepted appointment within thirty (30) days after the notice of resignation, the resigning Paying and Transfer Agent may petition any court of competent jurisdiction for the appointment of a successor Paying and Transfer Agent, which court may thereupon, after such notice as it may deem appropriate, appoint a successor Paying and Transfer Agent.

(3) In the event of a change of Paying and Transfer Agents, the predecessor Paying and Transfer Agent shall cease to be custodian of any funds held pursuant to this resolution in connection with its role as such Paying and Transfer Agent, and the successor Paying and Transfer Agent shall become such custodian; provided, however,

that before any such delivery is required to be made, all fees, advances and expenses of the retiring or removed Paying and Transfer Agent shall be fully paid. Every predecessor Paying and Transfer Agent shall deliver to its successor Paying and Transfer Agent all records of account, registration records, lists of holders of the Bonds and all other records, documents and instruments relating to its duties as such Paying and Transfer Agent.

(4) Any successor Paying and Transfer Agent appointed under the provisions hereof shall be a bank, trust company or national banking association having Federal Deposit Insurance Corporation insurance of its accounts, duly authorized to exercise corporate trust powers and subject to examination by and in good standing with the federal and/or state regulatory authorities under the jurisdiction of which it falls.

(5) Every successor Paying and Transfer Agent appointed hereunder shall execute, acknowledge and deliver to its predecessor Paying and Transfer Agent and to the County an instrument in writing accepting such appointment hereunder, and thereupon such successor Paying and Transfer Agent, without any further act, shall become fully vested with all the rights, immunities and powers, and be subject to all the duties and obligations, of its predecessor.

(6) Should any transfer, assignment or instrument in writing be required by any successor Paying and Transfer Agent from the County to more fully and certainly vest in such successor Paying and Transfer Agent the estates, rights, powers and duties hereby vested or intended to be vested in the predecessor Paying and Transfer Agent, any such transfer, assignment and written instruments shall, on request, be executed, acknowledged and delivered by the County.

(7) The County will provide any successor Paying and Transfer Agent with certified copies of all resolutions, orders and other proceedings adopted by the Governing Body relating to the Bonds.

(8) All duties and obligations imposed hereby on a Paying and Transfer Agent or successor Paying and Transfer Agent shall terminate upon the accomplishment of all duties, obligations and responsibilities imposed by law or required to be performed by this resolution.

(d) Any corporation or association into which a Paying and Transfer Agent may be converted or merged, or with which it may be consolidated or to which it may sell or transfer its assets as a whole or substantially as a whole, or any corporation or association resulting from any such conversion, sale, merger, consolidation or transfer to which it is a party, shall be and become successor Paying and Transfer Agent hereunder and vested with all the powers, discretions, immunities, privileges and all other matters as was its predecessor, without the execution or filing of any instrument or any further act, deed or conveyance on the part of either the County or the successor Paying and Transfer Agent, anything herein to the contrary notwithstanding, provided only that such successor Paying and Transfer Agent shall be satisfactory to the County and eligible under the provisions of Section 17(c)(4) hereof.

SECTION 18. The Bonds shall be prepared and executed as soon as may be practicable after the adoption of this resolution and shall thereafter be delivered to or as directed by the Placement Agent.

SECTION 19. (a) If (i) the County shall pay or cause to be paid to the owners of the Bonds the principal of, and interest to become due thereon at the times and in the manner stipulated therein and herein, (ii) all fees and expenses of the Paying and Transfer Agent shall have been paid, and (iii) the County shall have kept, performed and observed all and singular the covenants and promises in the Bonds and in this resolution expressed as to be kept, performed and observed by it or on its part, then the Bonds shall cease to be entitled to any lien, benefit or security under this resolution and shall no longer be deemed to be outstanding hereunder. If the County shall pay or cause to be paid to the owners of outstanding Bonds of a particular maturity, the principal of, and interest to become due thereon at the times and in the manner stipulated therein and herein, such Bonds shall cease to be entitled to any lien, benefit or security under this resolution and shall no longer be deemed to be outstanding hereunder.

(b) All Bonds for the payment of which sufficient monies, or, to the extent permitted by the laws of the State, (i) direct obligations of, or obligations the payment of the principal of and interest on which are unconditionally guaranteed by, the United States of America ("Government Obligations"), or (ii) certificates of deposit or other securities fully secured by Government Obligations, or (iii) evidences of ownership of proportionate interests in future interest or principal payments on Government Obligations held by a bank or trust company as custodian, under which the owner of the investment is the real party in interest and has the right to proceed directly and individually against the obligor on the Government Obligations and which Government Obligations are not available to satisfy any claim of the custodian or any person claiming through the custodian or to whom the custodian may be obligated, or (iv) municipal obligations, the payment of the principal of, interest and premium, if any, on which are irrevocably secured by Government Obligations and which Government Obligations are not subject to redemption prior to the date on which the proceeds attributable to the principal of such obligations are to be used and have been deposited in an escrow account which is irrevocably pledged to the payment of the principal of and interest and on such municipal obligations (all of which collectively, with Government Obligations, are hereinafter called "Defeasance Securities"), shall have been deposited with an escrow agent appointed for the purpose in trust for the owners thereof, which may be the Paying and Transfer Agent, (whether upon or prior to the maturity or the redemption date of such Bonds) shall be deemed to have been paid within the meaning of this Section, shall cease to be entitled to any lien, benefit or security under this resolution and shall no longer be deemed to be outstanding hereunder and the registered owners shall have no rights in respect thereof except to receive payment of principal of and interest on such Bonds from the funds held for that purpose. Defeasance Securities will be considered sufficient if said investments, with interest, mature and bear interest in such amounts and at such times as will assure sufficient cash to pay currently maturing interest and to pay principal when due on the Bonds. For the purpose of this Section, Defeasance Securities shall mean and include only (A) such Defeasance Securities which shall not be subject to redemption prior to their maturity other than at the option of the holder thereof or (B) Defeasance Securities which, if subject to redemption shall, nevertheless, in all events, regardless of when redeemed, provide sufficient and timely funds for payment of the principal of and interest on the Bonds to be paid thereby.

SECTION 20. As authorized by the Act, the Bonds shall be submitted to validation in the Chancery Court of Pearl River County, Mississippi, in the manner and with the force and effect provided by Sections 31-13-1 *et seq.*, Mississippi Code of 1972, as amended, and to that end a certified transcript of all proceedings and other documents relating to the sale and issuance of the Bonds forthwith shall be prepared and forwarded to the State's Bond Attorney by Bond Counsel and the Clerk.

SECTION 21. (a) There is hereby created and the County shall maintain with a qualified depository thereof a fund (the "2021 Bond Fund") in its name for the payment of the principal of and interest on the Bonds and the payment of the Paying and Transfer Agents' fees in connection therewith. There shall be deposited into the 2021 Bond Fund as and when received:

(1) the accrued interest, if any, received upon delivery of the Bonds;

(2) the avails of any of the ad valorem taxes levied and collected pursuant to Section 5 hereof;

(3) any income received from investment of monies in the 2021 Bond Fund; and

(4) any other funds available to the County which may be lawfully used for payment of the principal of and interest on the Bonds, and which the Governing Body in its discretion, may direct to be deposited into the 2021 Bond Fund.

(b) As long as any principal of and interest on the Bonds remains outstanding, the Clerk is hereby irrevocably authorized and directed to withdraw from the 2021 Bond Fund sufficient monies to make the payments herein provided for and to transfer same to the account of the Paying and Transfer Agent in time to reach said Paying and Transfer Agent at least five (5) days prior to the date on which said interest or principal and interest shall become due.

SECTION 22. Principal proceeds received upon the sale of the Bonds shall be deposited with the 2018 Trustee. A portion of the proceeds of the Bonds shall be deposited in the General Fund of the 2018 Indenture (as described in Section 23) and used by the 2018 Trustee to pay all legal fees and expenses including those of Bond Counsel, the Placement Agent, Counsel to the County (as hereinafter defined), Municipal Advisor fees and expenses, Paying and Transfer Agent fees and expenses, Purchaser's counsel fees, if any, premiums, commissions and all other fees and expenses incurred by the County in connection with the authorization, issuance, sale, validation and delivery of the Bonds and refunding the Refunded Bonds. The balance of the proceeds of the Bonds shall be deposited in the Redemption Account of the General Fund created under the 2018 Trust Indenture and used by the 2018 Trustee for the payment of the principal of and interest on the Refunded Bonds as such becomes due and payable and, upon redemption or maturity thereof, the principal of, premium, if any, and interest on the Refunded Bonds on the Redemption Date.

SECTION 23. The County hereby authorizes the payment of all fees and expenses incurred by the County in connection with the authorization, issuance, sale, validation, and delivery of the Bonds, including the costs of refunding the Refunded Bonds, by the 2018 Trustee from the General Fund of the 2018 Indenture upon receipt of a requisition for payment thereof

executed by the President, Clerk or any other Authorized Officer hereunder (the "Requisition"); provided, however, total costs of issuance for said Bonds shall not exceed 3.0% of the par amount of the Bonds (excluding Placement Agent's fee). The President, the Clerk or any other Authorized Officer is authorized to the Requisition for the payment of costs of issuance for the Bonds for such costs to be requisitioned from the General Fund of the 2018 Indenture. Any amounts which remain in the General Fund of the 2018 Indenture thirty (30) days after the payment of the costs of issuance for the Bonds shall be transferred by the 2018 Trustee to the County for deposit to the 2021 Bond Fund and used as permitted under this resolution and State law.

SECTION 24. The Governing Body, acting for an on behalf of the County, hereby irrevocably elects and directs that the Refunded Bonds selected for refunding shall be redeemed on such date as may be determined by the President, with the advice of the Municipal Advisor, to be in the best interest of the County and that is in compliance with the terms and provisions of the 2018 Indenture and the Refinancing Act (the "Redemption Date"). The Clerk is hereby authorized and directed to notify the Mississippi Development Bank and the 2018 Trustee pursuant to the terms and provisions of the 2018 Trust Indenture, of the refunding of the Refunded Bonds, and the 2018 Trustee is hereby authorized and directed to provide notice of the redemption of the Refunded Bonds to the holders of such Refunded Bonds pursuant to the terms and provisions of the 2018 Trust Indenture.

SECTION 25. Upon the recommendation of the Municipal Advisor, the President and/or the Clerk are hereby authorized to apply for a commitment for municipal bond insurance or any other form of credit enhancement from an insurance company providing financial guaranty insurance policies or financial institutions providing credit enhancement for bonds such as the Bonds (the "Credit Provider"). The President and/or the Clerk are further authorized to execute and deliver commitments for the provision of credit enhancement and any additional documents and certificates, which are required by any Credit Provider to provide such credit enhancement in connection with the issuance of the Bonds. Any changes, insertions and omissions to the documents authorized herein, as may be required by the Credit Provider, in connection with the Bonds are to be approved by the President, the execution of the commitment for said credit enhancement being conclusive evidence of such approval. In anticipation of the provisions of credit enhancement by any Credit Provider, the County hereby approves the references to the Credit Provider and such credit enhancement, and related documents, in the attached documents and the deletion or revision, as applicable, of said references if no credit enhancement is obtained in connection with the Bonds.

SECTION 26. If necessary, the President, with the advice of the Municipal Advisor and Bond Counsel, is hereby authorized and directed to appoint a verification agent (the "Verification Agent") in connection with the Bonds and the Refunded Bonds. The Verification Agent will verify the arithmetical accuracy of certain computations prepared by the Placement Agent which show the present value difference between the debt service on the Bonds and the debt service on the Refunded Bonds.

SECTION 27. Under the 2018 Indenture and the Refinancing Act, upon the issuance of the Bonds, the Refunded Bonds selected for refunding will be legally and economically defeased.

SECTION 28. [RESERVED].

SECTION 29. Notwithstanding any other provisions of this resolution, it is the intent of the Governing Body that all Authorized Officers are hereby authorized to execute any and all documents, contracts, certificates, instruments and papers for and on behalf of the County, and any and all acts and things as may be necessary or advisable in connection with the authorization, sale, preparation, execution, issuance, placement, and delivery of the Bonds.

SECTION 30. The Bonds are being sold to the Purchaser without a view for distributing said Bonds. The Purchaser of said Bonds shall be required to execute a certification at closing to the effect that the Bonds are being purchased for the account of the Purchaser without the intent to distribute. Based on the foregoing, the Bonds will be currently exempt from the continuing disclosure requirements of Securities Exchange Act Rule 15c-2-12.

SECTION 31. The President be, and is hereby directed, to take all actions necessary to secure an appropriate rating(s) on the Bonds.

SECTION 32. Butler Snow LLP, Ridgeland, Mississippi, is hereby authorized to serve as Bond Counsel. Bond Counsel's Engagement Letter, in the form submitted to this meeting and attached hereto as **EXHIBIT D**, shall be, and the same hereby is, approved in substantially said form. The President and Clerk and any other Authorized Officer of the County are hereby authorized and directed to execute and deliver the Engagement Letter with such changes, insertions and revisions therein as such officers, as representatives of the Governing Body, may, in their opinions, determine to be required, said execution being conclusive evidence of such approval. Further, Williams, Williams & Montgomery, P.A., Poplarville, Mississippi, is hereby authorized to serve as issuer counsel to the County.

SECTION 33. Raymond James & Associates, Inc., Memphis, Tennessee, is hereby selected as Placement Agent in connection with the placement of the Bonds. The County is hereby requested to execute the attached G-17 letter and IRMA letter (the "G-17/IRMA Letters") each attached hereto as **EXHIBIT E**. The President and Clerk and any other Authorized Officer of the County hereby authorized to execute said G-17 Letter/IRMA Letters.

SECTION 34. Government Consultants, Inc., Madison, Mississippi, is hereby authorized to serve as Independent Registered Municipal Advisor to the County. The County is hereby requested to execute the attached Independent Registered Municipal Advisor (IRMA) Representation letter (the "**M/A IRMA Letter**"), attached hereto as **EXHIBIT F**. The President and Clerk and any other Authorized Officer of the County are hereby authorized to execute said M/A IRMA Letter.

SECTION 35. Except as otherwise expressly provided herein, nothing in this resolution, express or implied, is intended or shall be construed to confer upon any person or firm or corporation other than the County, the holders of the Bonds issued under the provisions of this resolution, the Governing Body and the Paying and Transfer Agent, any right, remedy, or claim, legal or equitable, under and by reason of this resolution or any of the provisions hereof. This resolution, and all of its provisions are intended to be and shall be for the sole and exclusive

benefit of the County, the Governing Body and the holders from time to time of the Bonds issued under the provisions of this resolution.

SECTION 36. All covenants, stipulations, obligations and agreements of the County contained in this resolution, shall be binding upon the County, and, except as otherwise provided in this resolution, all rights, powers and privileges conferred and duties and liabilities imposed upon the County by the provisions of this resolution, shall be exercised or performed by the County. No stipulation, obligation or agreement herein contained or any other document necessary to conclude the issuance and sale of the Bonds shall be deemed to be a stipulation, obligation or agreement of any officer, agent or employee of the County, including its Governing Body, in his or her individual capacity, and no such officer, agent or employee shall be personally liable on the Bonds or be subject to personal liability or accountability by reason of the issuance and sale thereof.

SECTION 37. If any one or more of the provisions of this resolution shall for any reason be held to be illegal or invalid, such illegality or invalidity shall not affect any of the other provisions of this resolution, but this resolution shall be construed and enforced as if such illegal or invalid provision or provisions had not been contained herein.

SECTION 38. All orders, resolutions or proceedings of the Governing Body in conflict with the provisions of this resolution shall be and are hereby repealed, rescinded and set aside, but only to the extent of such conflict.

[The remainder of this page is intentionally left blank; signature page to follow.]

Following the reading of the foregoing Bond Resolution, Supervisor Perry seconded the motion for its adoption. The President put the question to a roll call vote, and the result was as follows:

Supervisor Donald Hart	voted: Yes
Supervisor Malcolm Perry	voted: Yes
Supervisor Hudson Holliday	voted: Yes
Supervisor Jason Spence	voted: Yes
Supervisor Sandy Kane Smith	voted: Yes

The motion having received the affirmative vote of a majority of the members present, the President declared the motion carried and the Bond Resolution adopted this the 5th day of April, 2021.

(SEAL)

CHANCERY CLERK ★ PEARL RIVER COUNTY, MISS. ★

President, Board of Supervisors

Melinda S Bourn by Ralph Dawson DC

Chancery Clerk, Pearl River County, Mississippi

EXHIBIT A

FORM OF PRIVATE PLACEMENT AGREEMENT

PRIVATE PLACEMENT AGREEMENT

This **PRIVATE PLACEMENT AGREEMENT** dated April ___, 2021 (this "**Placement Agreement**"), is by and between the **PEARL RIVER COUNTY, MISSISSIPPI** (the "**County**"), a body politic existing under the Constitution and laws of the State of Mississippi, and **RAYMOND JAMES & ASSOCIATES, INC.**, Memphis, Tennessee (the "**Placement Agent**").

WITNESSETH:

WHEREAS, the Board of Supervisors of the County, acting for and on behalf of the County, has authorized the issuance of the County's General Obligation Refunding Bonds, Series 2021, in the aggregate principal amount of $_____ (the "**Bonds**"), pursuant to the provisions of a Bond Resolution adopted by the Board of Supervisors on April 5, 2021 (the "**Bond Resolution**"); and

WHEREAS, the proceeds of the Bonds will be used to provide funds for the current refunding and prepayment of $11,044,000 aggregate principal amount of the outstanding $11,044,000 (original principal amount), of which $11,044,000 is currently outstanding, Mississippi Development Bank Special Obligation Bonds, Series 2018 (Pearl River County, Mississippi General Obligation Bond Project), dated September 14, 2018 (the "**Series 2018 Bonds**"), as described in Schedule I hereto, and simultaneous prepayment of an equal amount of the County's $11,044,000 (original aggregate principal amount) General Obligation Bonds, Series 2018, dated September 14, 2018; and

WHEREAS, the Bonds are more fully described in the Bond Resolution and in Schedule II attached hereto; and

WHEREAS, the County has employed the Placement Agent to act as its agent in connection with the private placement of the Bonds.

NOW, THEREFORE, for and in consideration of the covenants herein made, and upon the terms and subject to the conditions herein set forth, the parties hereto agree as follows:

Section 1. Definitions. All capitalized terms used herein and not otherwise herein defined shall have the meanings ascribed to them in the Bond Resolution.

Section 2. Appointment of Placement Agent. Pursuant to the Bond Resolution and this Placement Agreement, the County hereby appoints the Placement Agent as exclusive placement agent with respect to the Bonds, and the Placement Agent hereby accepts such appointment, with such duties as described herein and in the Bond Resolution.

Section 3. Placement of the Bonds. The Placement Agent hereby agrees, as the agent of the County, that Capital One Public Funding, LLC (the "**Lender**"), has agreed to extend the credit in the form of the Bonds, pursuant to the terms set forth in the Lender's Term Sheet dated March 22, 2021, and accepted by the County on April 5, 2021, attached hereto as Schedule III. The Lender is to acquire the Bonds at a price as set forth in Schedule IV (the "**Bond Price**"). It is

understood that the acquisition of the Bonds by the Lender is subject to (a) receipt by the Lender and the Placement Agent of an opinion of Butler Snow LLP ("**Bond Counsel**") to the effect that the Bonds constitute valid and legally binding obligations of the County payable from and secured by an irrevocable pledge of the avails of a direct and continuing tax to be levied annually without limitation as to time, rate or amount upon all the taxable property within the geographical limits of the County, as and to the extent set forth in the Bond Resolution, and to the effect that the interest on the Bonds is exempt from federal and State of Mississippi income taxes under existing laws, regulations, rulings and judicial decisions; (b) the delivery of certificates in form and tenor satisfactory to the Placement Agent and the Lender evidencing the proper execution and delivery of the Bonds and receipt of payment therefor, including a statement of the County, dated as of the date of such delivery, to the effect that there is no litigation pending or, to the knowledge of the signer or signers thereof, threatened relating to the issuance, sale and delivery of the Bonds from the County to the Lender; and (c) satisfaction of other conditions specified in the Bond Resolution.

Section 4. The Lender shall be required to deposit the Bond Price with or as directed by the County on or before May ___, 2021 (the "**Closing Date**"), as set forth in Schedule IV attached hereto. Subject to the acquisition of the Bonds by the Lender, the County will pay $_____.00 from the proceeds of the Bonds or from other funds of the County to the Placement Agent for its Placement Agent Fee (the "**Placement Agent Fee**") on or after the Closing Date. The Bonds will be placed on the Closing Date with the Lender in accordance with the exemptions set forth in Rule 15c2-12 of the Securities and Exchange Commission.

Section 5. Tax Exemption. Bond Counsel will deliver an opinion to the effect that interest on the Bonds is excludable from gross income for federal income tax purposes under existing statutes, regulations, rulings and court decisions.

Section 6. No Registration with DTC & No CUSIP Numbers; No Rating or Offering Document. The Bonds shall not be (i) assigned a separate rating by any municipal securities agency, (ii) registered with Depository Trust Company or any other securities depository, (iii) issued pursuant to any type of offering document or official statement, or (iv) assigned a CUSIP number by Standard & Poor's CUSIP Service.

Section 7. Payment to the County. The Placement Agent agrees that it will, on the Closing Date, cause the Lender to directly fund the Bond Price in immediately available funds pursuant to directions of the County. If the Lender does not transfer the Bond Price of the Bonds to be acquired by it (to or as directed by the County) or otherwise refuses to acquire the Bonds, the Placement Agent will use its reasonable best efforts to arrange for a substitute lender for the Bonds on the terms set forth in Section 3.

Section 8. Limitation. Nothing contained in this Placement Agreement shall obligate the Placement Agent to acquire the Bonds in the event the Lender fails to pay the Bond Price of the Bonds or in the event the Placement Agent is unable to arrange for the acquisition of the Bonds.

Section 9. Fees and Expenses. The Placement Agent Fee set forth herein represents the total compensation due to the Placement Agent for its services under this Placement Agreement.

The County is responsible for all other expenses and fees due in connection with the sale, delivery and issuance of the Bonds which are to be paid from the balance of the proceeds of the Bonds not utilized for the advance refunding of the Series 2018 Bond or from other funds of the County.

Section 10. Obligations of Placement Agent. The County acknowledges and agrees that this Placement Agreement does not constitute a guarantee by the Placement Agent to arrange the placement of the Bonds. It is understood that the Placement Agent's obligations under this Agreement are to use reasonable efforts throughout the term of this Placement Agreement to perform the services described herein. The County acknowledges and agrees that the Placement Agent is being retained to act solely as placement agent for the Bonds, and not as an agent, advisor or fiduciary to the County, and that this Placement Agreement is not intended to confer rights or benefits on any member, affiliate, shareholder or creditor of the County or any other person or entity or to provide the County or any other person with any assurances that the transaction will be consummated.

The Placement Agent shall act as an independent contractor under this Placement Agreement, and not in any other capacity, including as a fiduciary. The County acknowledges and agrees that: (i) the transaction contemplated by this Placement Agreement is an arm's length, commercial transaction between the County and the Placement Agent in which the Placement Agent is acting solely as a principal and is not acting as a municipal advisor, financial advisor or fiduciary to the County; (ii) the Placement Agent has not assumed any advisory or fiduciary responsibility to the County with respect to the transaction contemplated hereby and the discussions, undertakings and procedures leading thereto (irrespective of whether the Placement Agent has provided other services or is currently providing other services to the County on other matters); (iii) the only obligations the Placement Agent has to the County with respect to the transaction contemplated hereby expressly are set forth in this Placement Agreement; and (iv) the County has consulted its own legal, accounting, tax, financial and other advisors, as applicable, to the extent it has deemed appropriate.

Section 11. Governing Law. This Placement Agreement shall be governed by and construed in accordance with the laws of the State of Mississippi.

Section 12. Counterparts. This Placement Agreement may be executed in one or more counterparts, each of which shall be an original and all of which, when taken together, shall constitute but one and the same instrument.

Section 13. Binding Effect. This Placement Agreement shall be binding upon, and inure to the benefit of, the parties hereto and their respective successors and assigns, except that no party hereto may assign any of its rights or obligations hereunder without the consent of the other party.

Section 14. Investor Letter. On or prior to the Closing Date, the Lender shall execute an Investor Letter in substance and in force satisfactory to the County and the Placement Agent.

[The remainder of this page is intentionally left blank; signature pages to follow.]

IN WITNESS WHEREOF, the parties hereto have caused this Placement Agreement to be executed by their respective duly authorized representatives as of the day and year first above written.

RAYMOND JAMES & ASSOCIATES, INC., as Placement Agent

By:_____
Lindsey Rea, Managing Director

[SEAL]

PEARL RIVER COUNTY, MISSISSIPPI

By: _____
President, Board of Supervisors

ATTEST:

By: Melinda Burman by Kafa Davis DC
Chancery Clerk

(SEAL)

SCHEDULE I

REFUNDED BONDS

$11,044,000 (original principal amount, of which $11,044,000 remains outstanding) Mississippi Development Bank Special Obligation Bonds, Series 2018 (Pearl River County, Mississippi General Obligation Bond Project), dated September 14, 2018, maturing November 1 of each year listed below:

Maturity Date	Interest Rate	Principal Amount	Redemption Date	Redemption Price
2040*	3.95%	$11,044,000	May ___, 2021	100%

* Current Refunding. The Series 2018 Bonds were issued as a single term bond subject to mandatory sinking fund redemption prior to its scheduled maturity on November 1 each year below through 2040. The Bonds are being issued to refund, on May ___, 2021, all of the principal amount of the Series 2018 Bonds for the payments relating to the years listed below at a redemption price of 100% of the principal amount redeemed plus accrued interest to the redemption date from the proceeds of the Bonds, *to wit*:

Year	Principal Amount
2022	$398,000
2023	414,000
2024	431,000
2025	448,000
2026	466,000
2027	485,000
2028	504,000
2029	525,000
2030	546,000
2031	568,000
2032	591,000
2033	614,000
2034	639,000
2035	665,000
2036	692,000
2037	720,000
2038	749,000
2039	779,000
2040**	810,000
Total:	$11,044,000

**Final Maturity

SCHEDULE II

$_____,000
PEARL RIVER COUNTY, MISSISSIPPI
GENERAL OBLIGATION REFUNDING BONDS, SERIES 2021
Dated: May ___, 2021
Interest Due: May 1 and November 1 of each year, commencing November 1, 2021

MATURITY (DECEMBER 1)	PRINCIPAL AMOUNT DUE	INTEREST RATE	YIELD	BOND PRICE
2040*	$_____,000	3.25%	3.25%	100.000%

* Mandatory Sinking Fund Redemption. The Bonds are issued as a single term bond subject to mandatory sinking fund redemption prior to its scheduled maturity on November 1 in the years listed below at a redemption price of 100% of the principal amount redeemed plus accrued interest to the redemption date from an irrevocable pledge of the avails of a direct and continuing tax to be levied annually without limitation as to time, rate or amount upon all the taxable property within the geographical limits of the County, including, without limitation, amounts from such tax which are on deposit in the County's 2021 Bond Fund created under the Bond Resolution in accordance with the following schedule:

Year	Principal Amount

**Final Maturity

Interest Payment Date. The Bonds shall bear interest from the date thereof at the rate or rates hereafter specified, payable semi-annually on May 1 and November 1 of each year (each an "Interest Payment Date"), commencing November 1, 2021.

Optional Redemption. The Bonds are not callable prior to final maturity.

SCHEDULE III

TERM SHEET

SCHEDULE IV

BOND PRICE

Par Amount of Bonds	$_____,000.00
BOND PRICE DUE TO COUNTY:	$_____,000.00

EXHIBIT B

TERM SHEET

March 22, 2021

Lindsey Rea
Lindsey.Rea@raymondjames.com

Subject: Pearl River County, Mississippi
2021 Tax-Exempt Refunding General Obligation Refunding Bond (the "2021 Loan")

Dear Lindsey:

This Term Sheet is presented by Capital One Public Funding, LLC ("COPF") to Pearl River County, Mississippi ("Borrower or County") in connection with our discussions regarding the above-referenced potential refunding transaction. COPF owns 100% of the County's 2018 obligation issued through the Mississippi Development Bank (the "2018 Loan"). Although the 2018 Loan is not currently callable, COPF is willing to allow the County to prepay the 2018 Loan no later than May 27, 2021, on the following terms:

- COPF is proposing a refunding of the 2018 Loan, which carries an interest rate of 3.95% and is not callable until 11/01/28;
- COPF shall receive a notice of intent to refund approximately 40 days before closing;
- The 2018 Loan will be amended to allow for a special prepayment;
- COPF shall allow the special prepayment of all mandatory redemptions due and payable on 11/01/22 through and including 11/01/40 ($11,044,000) at 100% of the prepaid amount plus accrued interest to the prepayment date;
- The amortization of the 2021 Loan shall substantially track the amortization of the 2018 Loan; and
- The 2021 Loan shall a) have an interest rate of 3.25%, b) be insured by BAM and c) be noncallable.

Costs of Issuance
The Borrower shall be responsible for normal borrower costs of issuance including a financial advisor, placement agent, bond counsel and $7,500 (capped) of COPF's legal fees.

Direct Loan
The 2021 Loan shall be directly funded by (and registered in the name of) COPF and delivered in physical, non-book-entry, certificated form. It shall not be (i) assigned a separate rating by any rating agency; (ii) registered with the Depository Trust Company or any other securities depository; (iii) issued pursuant to any type of official statement, private placement memorandum or other offering document; or (iv) assigned a CUSIP number.

Audited Financial Statements
Upon request, as soon as available, the Borrower shall send COPF a copy of its audited financial statements as of the end of the fiscal year.

Municipal Advisor Rules
This term sheet is provided to the Borrower pursuant to and in reliance upon the "bank exemption" provided under the municipal advisor rules of the Securities and Exchange Commission, Rule 15Ba1-1 seq.

Role of Capital One Public Funding, LLC
The Borrower acknowledges and agrees that: (i) the information contained in this term sheet is for discussion purposes only and sets forth certain proposed terms and conditions of an arm's-length commercial transaction between the Borrower and COPF and does not constitute advice, an opinion or a recommendation by COPF;

Capital One Public Funding

(ii) the Borrower will make its own determination regarding whether to enter into the proposed transaction and the terms thereof, and will consult with and rely on the advice of its own financial, accounting, tax, legal and other advisors; (iii) COPF is acting solely for its own account in connection with the proposed transaction, and is not acting as a municipal advisor, financial advisor, agent or fiduciary to the Borrower or any other person or entity (including to any financial advisor or placement agent engaged by the Borrower) and the Borrower, its financial advisor and placement agent are free to retain the services of such advisors (including as it relates to structure, timing, terms and similar matters and compliance with legal requirements applicable to such parties) as it deems necessary or appropriate; (iv) COPF has no fiduciary duty pursuant to Section 15B of the Securities Exchange Act of 1934 to the Borrower with respect to the transaction contemplated hereby and the discussions, undertakings and procedures leading thereto; (v) neither COPF nor any of its affiliates is acting as a broker, dealer, underwriter or placement agent with respect the transactions contemplated hereby; (vi) the only obligations COPF has to the Borrower with respect to the transaction contemplated hereby expressly are set forth in this term sheet; and (vii) COPF is not recommending that the Borrower take an action with respect to the transaction contemplated by this term sheet. Before taking any action with respect to the Loan, the Borrower should discuss the information contained herein with the Borrower's own legal, accounting, tax, financial and other advisors, as it deems appropriate. If the Borrower would like a municipal advisor in this transaction that has legal fiduciary duties to it, Borrower is free to engage a municipal advisor to serve in that capacity.

Other Information

To the extent that updated financial and other credit materials have not already been provided to COPF or are not available through public resources, COPF may require and request the following: audited and unaudited financial statements; budgets; information on outstanding bond issues, lease transactions, and contingent/material liabilities; tax base details; and other reasonable and customary information relevant to the Borrower's credit quality and the source of repayment.

Confidentiality

The information contained herein is strictly confidential and is intended for review by the parties, their advisors and legal counsel only and may not be disclosed to any other person or entity, except as required by law or otherwise consented to by COPF.

Closing

Closing is anticipated to take place on May 27, 2021. This Term Sheet does not represent a commitment. The funding of the 2021 Loan will only occur upon the approval and acceptance of the 2021 Loan documents by COPF, the Borrower, and their respective counsels.

Term Sheet Expiration

This term sheet shall expire if not accepted by the Borrower by April 7, 2021. Once accepted, this term sheet shall expire if the transaction has not closed by May 27, 2021, unless extended by COPF at its sole discretion.

Conditions Precedent to Close

Any obligation of COPF to provide financing or otherwise shall arise only upon the acceptance, approval, and execution of final 2021 Loan documents signed by authorized signatories of COPF and not from statements (oral or written) made during the course of discussions among the parties (whether or not prior to or after the date hereof).

Thank you for the opportunity to offer this term sheet. Should you have any questions, please do not hesitate to contact me at (505) 503-7629 or jeffrey.sharp@capitalone.com.

Capital One Public Funding

Sincerely,

Jeffrey D. Sharp
Senior Vice President / Director of Business Development
Capital One Public Funding, LLC

cc: Jonathan Lewis, Capital One Public Funding, LLC
Brenda Barnes, Capital One Public Funding, LLC

ACCEPTED BY: Pearl River County, Mississippi

By

SANDY KANE SMITH
Name

President
Title

EXHIBIT C

FORM OF THE BONDS

Number _____ $_____

UNITED STATES OF AMERICA

PEARL RIVER COUNTY, MISSISSIPPI
GENERAL OBLIGATION REFUNDING BOND,
SERIES 2021

INTEREST RATE	MATURITY DATE	DATED DATE	[CUSIP]

REGISTERED OWNER:

PRINCIPAL SUM:

PEARL RIVER COUNTY, MISSISSIPPI (the "County"), a body politic existing under the Constitution and laws of the State of Mississippi (the "State"), hereby acknowledges itself indebted and for value received hereby promises to pay to the registered owner named above or registered assigns, on the maturity date stated above, upon presentation and surrender of this Bond at the corporate trust office of _____ (such bank and any successor thereto hereinafter called collectively, the "Paying and Transfer Agent"), the principal sum stated hereon in lawful money of the United States of America, and to pay to the registered owner hereof or registered assigns interest on such principal sum, in like money, from the dated date of this Bond until the maturity date hereof, at the interest rate per annum stated hereon, payable on the first day of May 1 and November 1 of each year, commencing November 1, 2021 with the first principal payment commencing November 1, 2022, by check or draft drawn upon the Paying and Transfer Agent, made payable to the registered owner named in, and mailed to the address of the registered owner as it shall appear on the registration records kept and maintained by the Paying and Transfer Agent as of the close of business on the date which shall be the fifteenth (15th) day (whether or not a business day) of the calendar month next preceding each interest payment date.

For the performance in apt time and manner of every official act herein required, and for the prompt payment of this Bond, both principal and interest, the full faith, credit and resources of the County are irrevocably pledged. The Bonds (as hereinafter defined) are and will continue to be payable as to principal and interest out of and secured by an irrevocable pledge of the avails of a direct and continuing tax to be levied annually without limitation as to time, rate or amount upon all the taxable property within the geographical limits of the County. The County's tax levy for any year shall be abated pro tanto to the extent the County on or prior to September 1 of that year has transferred monies to the 2021 Bond Fund for the Bonds, or has made other provisions

for funds to be applied toward the payment of the principal of and interest on the Bonds due during the ensuing fiscal year of the County, in accordance with the provisions of this resolution. The County will levy annually a special tax upon all taxable property within the geographical limits of the County adequate and sufficient to provide for the payment of the principal of and the interest on the Bonds as the same falls due, in accordance with the provisions of the Resolution.

This Bond is the one term bond of the General Obligation Refunding Bonds, Series 2021 in the principal sum of _____ Thousand Dollars ($_____) (the "Bonds") issued by the County pursuant to and in conformity with the Constitution and laws of the State, including, among others, Sections 31-27-1 *et seq.*, Mississippi Code of 1972, as amended (the "Act"), and pursuant to a resolution duly adopted by the Board of Supervisors of the County on April 5, 2021 (the "Resolution"), for the purpose of providing funds for (a) currently refunding and defeasing $_____ of the County's $11,044,000 (original principal amount) General Obligation Bond, Series 2018, dated September 14, 2018 (the "2018 County Bond"), and the simultaneous current refunding and payment of the Mississippi Development Bank's $11,044,000 (original aggregate principal amount) Special Obligation Bonds, Series 2018 (Pearl River County, Mississippi General Obligation Bond Project), dated September 15, 2018, maturing November 1, 2022 through November 1, 2040, inclusive, on May _, 2021, and (b) paying the costs incident to the sale and issuance of the Bonds. Reference is hereby made to the Resolution, copies of which are on file at the corporate trust office of the Paying and Transfer Agent and at the Office of the County Clerk, to all of the provisions of which the registered owner hereof assents by acceptance of this Bond.

This Bond is transferable only upon the records kept for that purpose at the corporate trust office of the Paying and Transfer Agent, upon surrender at said office, together with a written instrument of transfer satisfactory to the Paying and Transfer Agent duly executed by the registered owner or such registered owner's authorized attorney, and thereupon a new Bond or Bonds of like maturity, interest rate and aggregate principal amount shall be issued to the transferee. In like manner, this Bond may be exchanged for an equal aggregate principal amount of Bonds of any other authorized denominations. Bonds are issuable in the authorized denominations of $100,000 and increments of $1,000 each thereafter, or integral multiples thereof up to the amount of a single maturity. The issuance, transfer, exchange and replacement of the Bonds of this issue and other similar matters are governed by conditions on file at the corporate trust office of the Paying and Transfer Agent and at the Office of the County Clerk.

The Bonds shall not be subject to redemption prior to their respective maturities.

IT IS HEREBY CERTIFIED, RECITED AND DECLARED that all acts, conditions and things required to exist, happen and to be performed precedent to and in the issuance of this Bond do exist, have happened and have been performed in due time, form and manner as required by law, and that the issuance of this Bond and the issue of which it forms a part, together with all other obligations of the County, does not exceed or violate any constitutional or statutory limitation.

This Bond shall not be valid or become obligatory for any purpose until this Bond shall have been authenticated by the execution by the Paying and Transfer Agent of the Paying and Transfer Agent's Certificate hereon.

The County and the Paying and Transfer Agent may deem and treat the registered owner hereof as the absolute owner for the purpose of receiving payment of or on account of principal hereof and interest due hereon and for all other purposes and neither the County nor the Paying and Transfer Agent shall be affected by any notice to the contrary.

IN WITNESS WHEREOF, Pearl River County, Mississippi, acting by and through its Board of Supervisors, has caused this Bond to be executed in its name by the manual or facsimile signature of the President of the Board of Supervisors of the County, and has caused the official seal of the County to be affixed hereto, attested by the manual or facsimile signature of the County's Chancery Clerk.

(SEAL)

CHANCERY CLERK PEARL RIVER COUNTY, MISS.

PEARL RIVER COUNTY, MISSISSIPPI

By _____
President, Board of Supervisors

ATTEST:

Melinda S Bounon by Kafa Davis D.C.
Chancery Clerk

PAYING AND TRANSFER AGENT'S CERTIFICATE

This Bond is one of the Bonds of the above-designated issue of Bonds delivered in accordance with the terms of the within mentioned Resolution.

_____, as Paying and Transfer Agent

By _____
Authorized Signature

Date of Registration and Authentication: _____

VALIDATION CERTIFICATE

STATE OF MISSISSIPPI)
) ss:
COUNTY OF PEARL RIVER COUNTY)

I, Melinda Smith Bowman, Chancery Clerk of Pearl River County, Mississippi, do hereby certify that the issuance of the Bonds of which the within Bond is one has been validated and confirmed by decree of the Chancery Court of Pearl River County, Mississippi, rendered on the _____ day of _____, 2021 pursuant to the Act and that the within Bond has been registered in the registration records kept and maintained for that purpose.

_____
Chancery Clerk

ASSIGNMENT

FOR VALUE RECEIVED, the undersigned sells, assigns and transfers unto _____

_____
(Name and Address of Assignee)

the within Bond and does hereby irrevocably constitute and appoint _____ _____as registrar and transfer agent to transfer the said Bond on the records kept for registration thereof with full power of substitution in the premises.
Signature guaranteed:

_____
(Bank, Trust Company or Paying Agent)

_____
(Authorized Officer)

Date of Assignment: _____

Insert Social Security Number or other Tax Identification Number of Assignee

_____

_____
NOTICE: The signature to this Assignment must correspond with the name of the registered owner as it appears upon the face of the within Bond in every particular, without any alteration whatever, and must be guaranteed by a commercial bank or trust company or a member of a national securities exchange who is a member of a Medallion Signature Guarantee Program.

EXHIBIT D

BUTLER SNOW LLP ENGAGEMENT LETTER

BUTLER | SNOW

April 5, 2021

Board of Supervisors
Pearl River County, Mississippi

Re: Pearl River County, Mississippi General Obligation Refunding Bonds, Series 2021 in the aggregate principal amount of not to exceed Eleven Million Seven Hundred Thousand Dollars ($11,700,000) (the "**Bonds**")

Dear Ladies and Gentlemen:

The purpose of this engagement letter is to set forth certain matters concerning the services we will perform as bond counsel to Pearl River County, Mississippi (the "**County**") in connection with the issuance of the above-referenced Bonds. We understand that the Bonds are being issued for the purpose of providing funds for (a) current refunding and prepayment of $11,044,000 aggregate principal amount of the outstanding $11,044,000 (original principal amount), Mississippi Development Bank Special Obligation Bonds, Series 2018 (Pearl River County, Mississippi General Obligation Bond Project), dated September 14, 2018, and simultaneous prepayment of an equal amount of the County's $11,044,000 (original aggregate principal amount) General Obligation Bonds, Series 2018, dated September 14, 2018, as authorized by Sections 31-27-1 *et seq.*, Mississippi Code of 1972, as amended and supplemented (the "**Act**"), and (b) providing the costs of issuance thereof. We also understand that the Bonds will be secured by the full faith and credit of the County as authorized by and provided in the Act and will be privately placed.

SCOPE OF ENGAGEMENT

In connection with this engagement, we expect to perform the following duties:

1. Subject to the completion of proceedings to our satisfaction, render our legal opinion (the "**Bond Opinion**") regarding the validity and binding effect of the Bonds, the source of payment and security for the Bonds, and the excludability of interest on the Bonds from gross income for federal and State of Mississippi (the "**State**") income tax purposes;

2. Prepare and review documents necessary or appropriate for the authorization, issuance and delivery of the Bonds and coordinate the authorization and execution of such documents;

Post Office Box 6010
Ridgeland, MS 39158-6010

TROY JOHNSTON
601-985-4419
Troy.Johnston@butlersnow.com

Suite 1400
1020 Highland Colony Park
Ridgeland, Mississippi 39157

T 601.948.5711 • F 601.985.4500 • www.butlersnow.com

BUTLER SNOW LLP

3. Assist the County in seeking from any other governmental authorities such approvals, permissions, and exemptions as we determine are necessary or appropriate in connection with the authorization, issuance and delivery of the Bonds, except that we will not be responsible for any required Blue Sky filings;

4. Review legal issues relating to the structure of the Bond issue;

5. Pursue validation proceedings under State law;

6. Assist the County, in preparing the official statement (the "**Official Statement**"), if required, and subject to satisfactory completion of our review, provide to the County written advice that in the course of our participation, no information has come to our attention that leads us to believe that the Official Statement, as of its date (except for financial statements, other statistical data, feasibility reports and statements of trends and forecasts and book-entry language contained in the Official Statement and its appendices, as to which we will express no opinion), contains any untrue statement of material fact or omits to state any material fact necessary to make the statements in the Official Statement, in light of the circumstances under which they were made, not misleading. While it is unlikely that an Official Statement will be necessary in this transaction, a separate fee will be charged in the event that one is determined necessary;

7. Assist the County in presenting information to bond rating organizations, if necessary, and providers of credit enhancement relating to legal issues affecting the issuance of the Bonds;

8. Prepare and review the notice of sale pertaining to the competitive sale of the Bonds; and

9. Draft the continuing disclosure undertaking of the County, if necessary.

Our Bond Opinion will be addressed to the County and will be delivered by us on the date of delivery of the Bonds. The Bond Opinion will be based on facts and laws existing as of its date. In rendering our Bond Opinion, we will rely upon the certified proceedings and other certifications of public officials and other persons furnished to us without undertaking to verify the same by independent investigation, and we will assume continuing compliance by the County with applicable laws relating to the Bonds. During the course of this engagement, we will rely on you to provide us with complete and timely information on all developments pertaining to any aspect of the Bonds and their security. We understand that you will direct members of your staff and other employees of the County to cooperate with us in this regard. In rendering our Bond Opinion, we will expressly rely upon other counsel as to due authorization, execution and delivery of bond documents executed by the County.

Our duties in this engagement are limited to those expressly set forth above. Among other things, our duties under this engagement, without a separate engagement as may hereafter be agreed between the parties, do not include:

(a) Except as described in paragraph 6 above, assisting in the preparation or review of the Official Statement or any other disclosure document with respect to the Bonds, or performing an independent investigation to determine the accuracy, completeness or sufficiency of any such document or rendering advice that the Official Statement or other disclosure document does not contain any untrue statement of a material fact or omit to state a material fact necessary to make the statements contained therein, in light of the circumstances under which they were made, not misleading;

(b) Preparing request for tax rulings from the Internal Revenue Service ("**IRS**") or no action letters from the Securities and Exchange Commission ("**SEC**");

(c) If applicable, preparing Blue Sky or investment surveys with respect to the Bonds;

(d) Drafting State constitutional or legislative amendments;

(e) Pursuing test cases or other litigation, such as contested validation proceedings;

(f) Making an investigation or expressing any view as to the creditworthiness of the County or the Bonds;

(g) Except as described in paragraph 9 above, assisting in the preparation of, or opining on, a continuing disclosure undertaking pertaining to the Bonds or, after closing, providing advice concerning any actions necessary to assure compliance with any continuing disclosure undertaking;

(h) Representing the County in IRS examinations or inquiries, or SEC investigations;

(i) After closing, providing continuing advice to the County or any other party concerning any actions necessary to assure that interest paid on the Bonds will continue to be excludable from gross income for federal income tax purposes (e.g., our engagement does not include rebate calculations for the Bonds). Although our present engagement does not include rebate analysis and post-issuance advice relating to the Bonds, we would like to discuss with you a separate engagement involving rebate and other post-issuance compliance matters for the Bonds and other bond issues that you may have issued on various occasions. This includes the drafting of a formal debt management policy and post-issuance tax compliance policy;

(j) Giving and/or providing any financial advice or financially-related recommendations concerning the issuance of the Bonds as mandated by SEC and/or MSRB rules; or

(k) Addressing any other matters not specifically set forth above that is not required to render our Bond Opinion.

ATTORNEY-CLIENT RELATIONSHIP

Upon execution of this engagement letter, the County will be our client and an attorney-client relationship will exist between us. We understand that counsel to the County has been engaged by the County to assist with the issuance of the Bonds, particularly as to the authorization, execution and delivery of bond documents. We assume that all other parties will retain such counsel, as they deem necessary and appropriate to represent their interest in this transaction. We further assume that all other parties understand that in this transaction we represent only the County, we are not counsel to any other party, and we are not acting as an intermediary among the parties. Our services as bond counsel are limited to those contracted for in this letter, and the County's execution of this engagement letter will constitute an acknowledgment of those limitations. Our representation of the County will not affect, however, our responsibility to render an objective Bond Opinion.

Our representation of the County and the attorney-client relationship created by this engagement letter will be concluded upon issuance of the Bonds. Nevertheless, subsequent to Closing, we will mail to the IRS the appropriate IRS Form 8038-G and prepare and distribute to the participants in the transaction a transcript of the proceedings pertaining to the Bonds.

PROSPECTIVE CONSENT

As you are aware, Butler Snow represents many political subdivisions, companies and individuals. It is possible that during the time that we are representing the County, one or more of our present or future clients will have transactions with the County. It is also possible that we may be asked to represent, in an unrelated matter, one or more of the entities involved in the issuance of the Bonds. We do not believe that such representation, if it occurs, will adversely affect our ability to represent you as provided in this letter, either because such matters will be sufficiently different from the issuance of the Bonds so as to make such representations not adverse to our representation of you, or because the potential for such adversity is remote or minor and outweighed by the consideration that it is unlikely that advice given to the other client will be relevant to any aspect of the issuance of the Bonds. Execution of this letter will signify the County's consent to our representation of others consistent with the circumstances described in this paragraph.

FEES

Based upon: (i) our current understanding of the terms, structure, size and schedule of the financing represented by the Bonds; (ii) the duties we will undertake pursuant to this engagement letter; (iii) the time we anticipate devoting to the financing; and (iv) the responsibilities we will assume in connection therewith, our fees and expenses will be not to exceed one percent (1.0%) of the par amount of the Bonds.

If the financing is not consummated, we understand and agree that we will not be paid for our time expended on your behalf but will be paid for client charges made or incurred on your behalf.

RECORDS

At your request, papers and property furnished by you will be returned promptly upon receipt of payment for outstanding fees and client charges. Our own files, including lawyer work product, pertaining to the transaction will be retained by us. For various reasons, including the minimization of unnecessary storage expenses, we reserve the right to dispose of any documents or other material retain by us after the termination of this engagement.

If the foregoing terms are acceptable to you, please so indicate by returning the enclosed copy of this engagement letter dated and signed by an authorized officer, retaining the original for your files. We look forward to working with you.

BUTLER SNOW LLP

By: _____
Troy Johnston

Accepted and Approved:

PEARL RIVER COUNTY, MISSISSIPPI

BY: _____
President, Board of Supervisors

Authorized by Resolution of the Governing Body of Pearl River County, Mississippi dated April 5, 2021.

EXHIBIT E

RAYMOND JAMES G-17/IRMA LETTER

RAYMOND JAMES®

000145

April 5, 2021

Pearl River County, Mississippi
200 S. Main Street
Poplarville, Mississippi 39740

Re: Required Representation by Issuer, Engagement of, and Disclosures by Placement Agent Pursuant to SEC Municipal Advisor Rule and MSRB Rule G-17
Pearl River County, Mississippi General Obligation Refunding Bonds, Series 2021
Pearl River County, Mississippi Taxable Limited Obligation Revenue Refunding Bonds, Series 2021

Dear President and Board of Supervisors:

We are writing to (a) confirm our engagement as placement agent; (b) request the Required Representation by Pearl River County, Mississippi ("Issuer"); and (c) provide you, as President of the Board of Supervisors of the Issuer, and an official of the Issuer with the authority to bind the Issuer by contract, with certain disclosures relating to the captioned bond issue (the "Bonds"), as required by the Securities and Exchange Commission's Municipal Advisor Rule ("MA Rule"), and the Municipal Securities Rulemaking Board ("MSRB") Rule G-17 as set forth in MSRB Notice 2019-20 (Nov. 8, 2019).[1]

The Issuer hereby confirms and engages Raymond James & Associates, Inc. ("RJA"), to serve as placement agent and not as a financial advisor or municipal advisor, in connection with the issuance of the Bonds. As part of our services as placement agent, RJA may provide advice concerning the structure, timing, terms, and other similar matters concerning the issuance of the Bonds.

Additionally, pursuant to an exemptions provided for in the MA Rule, RJA would not be considered the Issuer's municipal advisor if the Issuer is already represented by an independent registered municipal advisor (an "IRMA") with respect to the same aspects upon which RJA provides financing ideas and recommendations to the Issuer (the "IRMA Exemption"). To rely upon the IRMA Exemption, the MA Rule requires RJA to obtain the following representation directly from the Issuer:

Required Representation by Issuer: Issuer hereby represents that it is represented by, and will rely upon (i.e., seek and consider) the advice of Government Consultants, Inc. ("Municipal Advisor"), an independent registered municipal advisor, in connection with any advice or recommendations that RJA may provide the Issuer relating to the issuance of municipal securities and/or municipal financial products.

By counter signing this letter, the Issuer hereby makes, and provides to RJA, the above Required Representation by Issuer. Furthermore, the MA Rule requires RJA to provide the Issuer with the following disclosure.

[1] Revised Interpretive Notice Concerning the Application of MSRB Rule G-17 to Underwriters of Municipal Securities (effective Mar. 31, 2021).

Required Disclosure by RJA: By obtaining the above Required Representation by Issuer, RJA is not a municipal advisor to the Issuer and is not subject to the fiduciary duty set forth in Section 15B(c)(1) of the Securities Exchange Act of 1934 with respect to any such issuance of municipal securities and/or municipal financial products.

Finally, the following G-17 conflict of interest disclosures are now broken down into three types, including: (I) dealer-specific conflicts of interest disclosures (if applicable), (II) transaction-specific disclosures (if applicable), and (III) standard disclosures.

I. Dealer-Specific Conflicts of Interest Disclosures

RJA has identified the following potential or actual dealer-specific material conflicts or business relationships we wish to call to your attention. When we refer to *potential* material conflicts throughout this letter, we refer to ones that are reasonably likely to mature into *actual* material conflicts during the course of the transaction, which is the standard required by MSRB Rule G-17.

In the ordinary course of its various business activities, RJA and its affiliates, officers, directors, and employees may purchase, sell or hold a broad array of investments and may actively trade securities, derivatives, loans, commodities, currencies, credit default swaps, and other financial instruments for their own account and for the accounts of customers. Such investment and trading activities may involve or relate to assets, securities and/or instruments of the Issuer (whether directly, as collateral securing other obligations or otherwise) and/or persons and entities with relationships with the Issuer. RJA and its affiliates also may communicate independent investment recommendations, market advice or trading ideas and/or publish or express independent research views in respect of such assets, securities or instruments and at any time may hold, or recommend to clients that they should acquire, long and/or short positions in such assets, securities and instruments.

II. Transaction-Specific Disclosures

- Disclosures Concerning Complex Municipal Securities Financing:
  - Because we have recommended to the Issuer a financing structure that may be a "complex municipal securities financing" for purposes of MSRB Rule G-17, attached is a description of the material financial characteristics of that financing structure as well as the material financial risks of the financing that are known to us and reasonably foreseeable at this time.

III. Standard Disclosures

- Disclosures Concerning the Placement Agent's Role:
  - MSRB Rule G-17 requires a placement agent to deal fairly at all times with both issuers and investors.
  - The placement agent's primary role is to procure one or more purchases of the Bonds in an arm's-length commercial transaction with the Issuer. The placement agent has financial and other interests that differ from those of the Issuer.

- Unlike a municipal advisor, a placement agent does not have a fiduciary duty to the Issuer under the federal securities laws and is, therefore, not required by federal law to act in the best interests of the Issuer without regard to its own financial or other interests.

- The Issuer may choose to engage the services of a municipal advisor with a fiduciary obligation to represent the Issuer's interest in this transaction.

- The placement agent has a duty to procure a purchaser of the Bonds from the Issuer at a fair and reasonable price, but must balance that duty with their duty to place the Bonds with purchasers at prices that are fair and reasonable.

- The placement agent will review the official statement or offering document, if any, for the Bonds in accordance with, and a part of, their respective responsibilities to investors under the federal securities laws, as applied to the facts and circumstances of this transaction. Under federal securities law, an issuer of securities has the primary responsibility for disclosure to investors. The review of the official statement or offering document, if any, by the placement agent, as the case may be, is solely for purposes of satisfying the placement agent's obligations under the federal securities laws and such review should not be construed by an issuer as a guarantee of the accuracy or completeness of the information in the official statement.

- Disclosures Concerning the Placement Agent's Compensation:

  - The placement agent will be compensated by a fee that will be negotiated and entered into in connection with the issuance of the Bonds. Payment or receipt of the placement agent fee or may be contingent on the closing of the transaction and the amount of the fee or discount may be based, in whole or in part, on a percentage of the principal amount of the Bonds. While this form of compensation is customary in the municipal securities market, it presents a conflict of interest since the placement agent may have an incentive to recommend to the Issuer a transaction that is unnecessary or to recommend that the size of the transaction be larger than is necessary.

If you or any other Issuer officials have any questions or concerns about these disclosures, please make those questions or concerns known immediately to the undersigned. In addition, you should consult with the Issuer's own financial and/or municipal, legal, accounting, tax and other advisors, as applicable, to the extent you deem appropriate.

Please note that nothing in this letter should be viewed as either (i) a commitment by the underwriters to purchase or sell all the Bonds and any such commitment will only exist upon the execution of any bond purchase agreement or similar agreement and then only in accordance with the terms and conditions thereof, or (ii) a commitment by the placement agent to place the Bonds.

You have been identified by the Issuer as a primary contact for the Issuer's receipt of these disclosures, In the absence of identification: It is our understanding that you have the authority to bind the Issuer by contract with us, and that you are not a party to any disclosed conflict of interest relating to the subject transaction. If our understanding is incorrect, please notify the undersigned immediately.

Under SEC and MSRB Rules, we are required to (i) confirm our role and engagement as placement agent of the Bonds, (ii) receive the Required Representation by Issuer, ***and*** (iii) seek your acknowledgement that you have received this letter. Accordingly, please send me an email (1) confirming that RJA is engaged as placement agent, as the case may be, of the Bonds, (2) making the Required Representation by Issuer, ***and*** (3) acknowledging your receipt hereof. Alternatively, you may sign and return (or sign, scan, and email) the enclosed copy of this letter to me at the address set forth above.

Depending on the structure of the transaction that the Issuer decides to pursue, or if additional actual or potential material conflicts are identified, we may be required to send you additional disclosures regarding the material financial characteristics and risks of such transaction and/or describing those conflicts. At that time, we also will seek your acknowledgement of receipt of any such additional disclosures.

We look forward to working with you in connection with the issuance of the Bonds. We appreciate your business.

Sincerely,

Lindsey Rea

Lindsey Rea
Managing Director
RAYMOND JAMES & ASSOCIATES, INC.

Acknowledgement:

Signature: _____ Date: 4-5-21

Title: President

CC: Butler Snow LLP, Bond Counsel
Government Consultants, Municipal Advisor
Williams, Williams & Montgomery, Issuer's Counsel

Attached: Financing Disclosures

Fixed Rate Structure Disclosure

The following is a general description of the financial characteristics and security structures of fixed rate municipal bonds ("Fixed Rate Bonds"), as well as a general description of certain financial risks that are known to us and reasonably foreseeable at this time and that you should consider before deciding whether to issue Fixed Rate Bonds. If you have any questions or concerns about these disclosures, please make those questions or concerns known immediately to us. In addition, you should consult with your financial and/or municipal, legal, accounting, tax, and other advisors, as applicable, to the extent you deem appropriate.

Financial Characteristics

Maturity and Interest. Fixed Rate Bonds are interest-bearing debt securities issued by state and local governments, political subdivisions and agencies and authorities, whether for their benefit or as a conduit issuer for a nongovernmental entity. Maturity dates for Fixed Rate Bonds are fixed at the time of issuance and may include serial maturities (specified principal amounts are payable on the same date in each year until final maturity) or one or more term maturities (specified principal amounts are payable on each term maturity date) or a combination of serial and term maturities. The final maturity date typically will range between 10 and 30 years from the date of issuance. Interest on the Fixed Rate Bonds typically is paid semiannually at a stated fixed rate or rates for each maturity date.

Redemption. Fixed Rate Bonds may be subject to optional redemption, which allows you, at your option, to redeem some or all the bonds on a date prior to scheduled maturity, such as in connection with the issuance of refunding bonds to take advantage of lower interest rates. Fixed Rate Bonds will be subject to optional redemption only after the passage of a specified period, often approximately ten years from the date of issuance, and upon payment of the redemption price set forth in the bonds, which may include a redemption premium. You will be required to send out a notice of optional redemption to the holders of the bonds, usually not less than 30 days prior to the redemption date. Fixed Rate Bonds with term maturity dates also may be subject to mandatory sinking fund redemption, which requires you to redeem specified principal amounts of the bonds annually in advance of the term maturity date. The mandatory sinking fund redemption price is 100% of the principal amount of the bonds to be redeemed.

Security

Payment of principal of and interest on a municipal security, including Fixed Rate Bonds, may be backed by various types of pledges and forms of security, some of which are described below.[2]

General Obligation Bonds. "General obligation (GO) bonds" are debt securities to which your full faith and credit is pledged to pay principal and interest. If you have taxing power, generally you will pledge to use your ad valorem (property) taxing power to pay principal and interest. The debt service on "unlimited tax" GO bonds are paid from ad valorem taxes which are not subject

[2] The discussion of security characteristics is limited to general obligation and revenue bond structures. This summary should be expanded and modified, as necessary, for other security structures, such as bonds that are secured by a double-barreled pledge (general obligation and revenues), annual appropriations or a moral obligation of the issuer or another governmental entity. If the security for the bonds is known at the time this disclosure is provided to the issuer, include only those portions relevant to the actual security for the bonds.

to state constitutional property tax millage limits, whereas "limited tax" GO Bonds are subject to such limits.

General obligation bonds constitute a debt and, depending on applicable state law, may require that you obtain approval by voters prior to issuance. In the event of default in required payments of interest or principal, the holders of general obligation bonds generally will have certain rights under state law to compel you to impose a tax levy.

Revenue Bonds. "Revenue bonds" are debt securities that are payable only from a specific source or sources of revenues. Revenue bonds are not a pledge of your full faith and credit, and you (or, if you are a conduit issuer, the obligor, as described in the following paragraph) are obligated to pay principal and interest on your revenue bonds only from the revenue source(s) specifically pledged to the bonds. Revenue bonds do not permit the bondholders to compel you to impose a tax levy for payment of debt service. Pledged revenues may be derived from operation of the financed project or system, grants or excise or other specified taxes. Generally, subject to state law or local charter requirements, you are not required to obtain voter approval prior to issuance of revenue bonds. If the specified source(s) of revenue become inadequate, a default in payment of principal or interest may occur. Various types of pledges of revenue may be used to secure interest and principal payments on revenue bonds. The nature of these pledges may differ widely based on state law, the type of issuer, the type of revenue stream and other factors.

Some revenue bonds (conduit revenue bonds) may be issued by a governmental issuer acting as a conduit for the benefit of a private sector entity or a 501(c)(3) organization (the obligor). Conduit revenue bonds commonly are issued for not-for-profit hospitals, educational institutions, single and multi-family housing, airports, industrial or economic development projects, and student loan programs, among other obligors. Principal and interest on conduit revenue bonds normally are paid exclusively from revenues pledged by the obligor. Unless otherwise specified under the terms of the bonds, you are not required to make payments of principal or interest if the obligor defaults.

The description above regarding "Security" is only a summary of certain possible security provisions for the bonds and is not intended as legal advice. You should consult with your bond counsel for further information regarding the security for the bonds.

Financial Risk Considerations

Certain risks may arise in connection with your issuance of Fixed Rate Bonds, including some or all the following (generally, the obligor, rather than the issuer, will bear these risks for conduit revenue bonds):

Issuer Default Risk. You may be in default if the funds pledged to secure your bonds are not enough to pay debt service on the bonds when due. The consequences of a default may be serious for you and, depending on applicable state law and the terms of the authorizing documents, the holders of the bonds, the trustee and any credit support provider may be able to exercise a range of available remedies against you. For example, if the bonds are secured by a general obligation pledge, you may be ordered by a court to raise taxes. Other budgetary adjustments also may be necessary to enable you to provide sufficient funds to pay debt service on the bonds. If the bonds are revenue bonds, you may be required to take steps to increase the available revenues that are pledged as security for the bonds. A default may negatively impact your credit ratings and may effectively limit your ability to publicly offer bonds or other securities at market interest rate levels. Further, if you are unable to provide sufficient funds to

remedy the default, subject to applicable state law and the terms of the authorizing documents, you may find it necessary to consider available alternatives under state law, including (for some issuers) state-mandated receivership or bankruptcy. A default also may occur if you are unable to comply with covenants or other provisions agreed to in connection with the issuance of the bonds.

This description is only a summary of issues relating to defaults and is not intended as legal advice. You should consult with your bond counsel for further information regarding defaults and remedies.

Redemption Risk. Your ability to redeem the bonds prior to maturity may be limited, depending on the terms of any optional redemption provisions. If interest rates decline, you may be unable to take advantage of the lower interest rates to reduce debt service.

Refinancing Risk. If your financing plan contemplates refinancing some or all the bonds at maturity (for example, if you have term maturities or if you choose a shorter final maturity than might otherwise be permitted under the applicable federal tax rules), market conditions or changes in law may limit or prevent you from refinancing those bonds when required.

Reinvestment Risk. You may have proceeds from the issuance of the bonds available to invest prior to the time that you are able to spend those proceeds for the authorized purpose. Depending on market conditions, you may not be able to invest those proceeds at or near the rate of interest that you are paying on the bonds, which is referred to as "negative arbitrage".

Tax Compliance Risk. The issuance of tax-exempt bonds is subject to several requirements under the United States Internal Revenue Code, as enforced by the Internal Revenue Service (IRS). You must take certain steps and make certain representations prior to the issuance of tax-exempt bonds. You also must covenant to take certain additional actions after issuance of tax-exempt bonds. A breach of your representations or your failure to comply with certain tax-related covenants may cause the interest on bonds to become taxable retroactively to the date of issuance of the bonds, which may result in an increase in the interest rate that you pay on the bonds or the mandatory redemption of the bonds. The IRS also may audit you or your bonds, in some cases on a random basis and in other cases targeted to specific types of bond issues or tax concerns. If tax-exempt bonds are declared taxable, or if you are subject to audit, the market price of your bonds may be adversely affected. Further, your ability to issue other tax-exempt bonds also may be limited.

This description of tax compliance risks is not intended as legal advice and you should consult with your bond counsel regarding tax implications of issuing the bonds.

EXHIBIT F

GOVERNMENT CONSULTANT'S IRMA LETTER

GOVERNMENT CONSULTANTS

GOVERNMENT CONSULTANTS, INC.

Consulting & Municipal Advisory Firm

116 Village Boulevard
Madison, Mississippi 39110

Telephone: (601) 982-0005
Facsimile: (601) 982-2448
Email: gcms@gc-ms.net

April 5, 2021

President and Board of Supervisors
Pearl River County, Mississippi
200 S. Main Street
Poplarville, Mississippi 39470

Re: Pearl River County, Mississippi
Not to Exceed $11,700,000 Pearl River County, Mississippi General Obligation Refunding Bonds, Series 2021 (the "Bonds")
Disclosure and Engagement Letter (the "Letter")

Dear President and Board of Supervisors,

We are writing you to provide certain disclosures to you as representative of Pearl River County, Mississippi (the "Issuer") as required by the Securities and Exchange Commission ("SEC") and Municipal Securities Rulemaking Board ("MSRB" or the "Board"). Government Consultants, Inc. ("GCI" or the "Municipal Advisor") is an Independent Registered Municipal Advisor and welcomes the opportunity to provide municipal advisory services to the Issuer for the issuance of the above referenced Bonds.

Disclosures Concerning our Role as Municipal Advisor

(i) The Municipal Advisor has a fiduciary duty to the Issuer. This is different than an underwriter, if any, who only has an obligation to deal fairly with you, as Issuer. The underwriter or placement agent, if any, has financial and other interests that differ from the Issuer, unlike the Municipal Advisor who has no financial or other interests that differ from the Issuer.

(ii) We shall provide advice concerning the structure, timing, terms, sizing and other similar matters related to any potential bond or debt issuance by the Issuer.

(iii) We shall make a reasonable inquiry to the relevant facts that help determine what course of action to take that best suits the Issuer. A reasonable analysis will be conducted to determine that all advice and/or recommendation(s), are not based on materially inaccurate or incomplete information.

(iv) We shall evaluate possible material risks, benefits and alternatives with the Issuer.

(v) Our duties are limited to this transaction and the above-mentioned disclosures.

The MSRB provides a brochure covering information for municipal advisory client protections and appropriate regulatory authority contact information on the MSRB homepage at http://www.msrb.org.

Disclosure Concerning Conflicts of Interest and Other Information

MSRB Rule G-42 requires that GCI provide in writing any disclosures relating to actual or potential material conflicts of interest, including certain categories of potential conflicts of interest identified in MSRB Rule G-42, if applicable. After reasonable due diligence by GCI, there are no known material conflicts of interest that may affect GCI's ability to serve as a municipal advisor to the Issuer. If new material conflict(s) of interest occurs after the delivery and execution of this Letter, GCI will disclose all new material conflict(s) of interest to the Issuer.

In addition to providing disclosures concerning material conflict(s) of interest, MSRB Rule G-42 further requires GCI to have a fiduciary duty that includes a duty of loyalty and duty of care to the Issuer and to disclose our role and duties as a Municipal Advisor. Our primary obligation is to always act in the best interest of the Issuer.

Disclosure Concerning the Compensation

Our compensation for serving as municipal advisor will be contingent on the closing of the transaction(s) for the issuance of bonds and is based, in part, on the size of the bonds. We will negotiate with the Issuer as to compensation and will be paid upon closing of the transaction(s). The Municipal Advisor will abide by its fiduciary duty to the Issuer and provide unbiased and independent advice as required by MSRB.

Disclosure of Information Regarding Legal Events and Disciplinary History

MSRB Rule G-42 requires that all municipal advisors, including GCI, provide in writing to their clients certain legal or disciplinary events that are material to the Issuer's evaluation of GCI or the integrity of GCI management or personnel. GCI believes there are no known legal or disciplinary events reported on any Form MA or Form MA-I that are material to your evaluation of GCI and there are no recent changes made on any Form MA or Form MA-I that are material to your evaluation. Any such information, whether material or not must be reported on Form MA and/or MA-I filed with the SEC, which forms are available and which can be viewed on the SEC's EDGAR system website at http://www.sec.gov/edgar/searchedgar/companysearch.html.

Disclosure Relating to Issuing Bonds

As with any issuance of debt, your obligation to pay principal and interest when due, will be a contractual obligation that will require you to make these payments no matter what budget restraints you encounter. The failure to pay principal and interest when due, could cause you to be in default. A default may negatively impact your credit ratings and may effectively limit your ability to publicly offer bonds or other securities at market rate levels. Please be aware of the following basic aspects of the Bonds.

Fixed rate bonds are interest bearing debt securities issued by an issuer. The interest rates for these bonds are specified at closing and will not change while the bonds are outstanding. Maturity dates for fixed rate bonds are fixed at the time of the issuance and may include serial maturities (specified principal amounts are payable on the same date each year until final maturity) or a term maturity (specified principal amounts are payable on each term maturity date) or a combination of serial and term maturities. Interest on fixed rate bonds is typically paid semiannually at a stated fixed rate or rates for each maturity.

General obligation bonds are debt securities to which your full faith and credit is pledged to pay principal and interest. Also, the Issuer pledges to use your ad valorem taxing power, if needed, to pay principal and interest.

This debt issuance is secured by a millage collected within the jurisdiction of the Issuer. The Issuer promises to collect the taxes and repay the debt to which it is pledged.

Additionally, the Bonds will be offered as federally tax-exempt obligations. This requires that you comply with various Internal Revenue Service ("IRS") requirements and restrictions relating to how you use and invest the proceeds of the bond issue, how you use any facilities constructed with the proceeds of the bond issue and other restrictions throughout the term of the Bonds.

It is recommended that you consult with bond counsel on such tax matters related to the issuance of the Bonds.

Disclosure Concerning the Term of Engagement

The Term of Engagement is effective on the execution date of the document that employed GCI as the Issuer's appointed municipal advisor and ends upon the closing and delivery of the Bonds. The Engagement may be terminated with or without cause by the Issuer or the Municipal Advisor. A written notice must be delivered to the other party, specifying the effective date of the termination.

Acknowledgement

We must seek your acknowledgement that you have received this Letter. Accordingly, please acknowledge receipt of this Letter on behalf of the Issuer in the space provided below. If you are not authorized to execute this Letter on behalf of the Issuer, please notify GCI immediately so the correct individual may be contacted. Please let us know if you have any questions or concerns.

Sincerely,

Government Consultants, Inc.

BY: Lynn Norris / tkw
Lynn Norris

RECEIPT ACKNOWLEDGEMENT

BY: _____ **dated as of approval April 5, 2021**
Signature **Date**
President, Board of Supervisors, Pearl River County, Mississippi
Authorized Representative

ORDER TO APPROVE CONSENT AGENDA ITEMS

There came on this day to be considered by the Board of Supervisors of Pearl River County, Mississippi, the matter of Consent Agenda Items.

Upon motion made by Malcolm Perry and seconded by Jason Spence, the following order was adopted, to-wit:

Be It Ordered by the Pearl River County Board of Supervisors to approve the following Consent Agenda Items as listed with attachments:

A. Proclamation declaring April, 2021 as Sexual Assault Awareness Month.

B. Approve to restructure the Nicholson Fire Truck financing terms from 3 years to 5 years with First Southern Bank.

C. Approve Private Road Name - SWEET HOME LN

D. Execute Lower Pearl River Valley Foundation Grant Agreement in the amount of $41,097 for Crossroads Volunteer Fire Department to breathing apparatus.

E. Letters of notice to Pearl River County Hospital & Nursing Home that Pearl River County will provide fuel and water in case of emergency as long as Pearl River County has available.

G. Pearl River County Fair Committee additions

H. Acknowledge Marion County Public Notice on proposed Amendment to Solid Waste Management Plan

I. Accept financing quotes on (4) new Ford 3/4 Ton Pickup Trucks and finance with lowest quote.

Ordered and adopted, this the 5th day of April, 2021.

Voting AYE: Donald Hart, Malcolm Perry, Hudson Holliday, Jason Spence, and Sandy Kane Smith
Voting NAY: None

PROCLAMATION

000158

Whereas, Pearl River County shares a critical concern for victims of sexual violence and a desire to support their needs for justice and healing; and

Whereas, in 2020 the Gulf Coast Center for Nonviolence served the needs of 184 adult and child victims of sexual assault through rape crisis interventions at hospitals and individual and group counseling sessions; and

Whereas, current estimates suggest as few as 1 in 5 sexual assaults will be reported to law enforcement and less than 3 percent will result in the conviction and incarceration of the perpetrator; and

Whereas, research shows that victims are far more likely to disclose their sexual assault to a friend or family member, and when these loved ones respond with doubt, shame, or blame, victims suffer additional negative effects on their physical and psychological well-being; and

Whereas, the national Start by Believing public awareness campaign is designed to improve the responses of friends, family members, and community professionals, so they can help victims to access supportive resources and engage the criminal justice system;

Whereas, advocates, professionals, volunteers, and concerned community members will devote the month of April to raising public awareness of the crisis of sexual assault as National Sexual Assault Awareness Month, encouraging people across our community to Start by Believing victims of sexual assault;

Now Therefore, Be it Proclaimed by all members of the Pearl River County Board of Supervisors that they support the Start by Believing public awareness campaign and do hereby declare the month of April 2021 as

Sexual Assault Awareness Month

And reaffirm our commitment to ending sexual assault within our community.

IN TESTIMONY WHEREOF, we have hereunto affixed the seal of Pearl River County on this, the 5th day of April, 2021.

(SEAL)

CHANCERY CLERK
PEARL RIVER COUNTY, MISS.

President

Melinda S Bouma by Kelly Dau DC
Attest: Clerk

March 23, 2021

Pearl River County Board of Supervisors:

RE: Nicholson Fire Truck Financing

I would like to request the Board approve restructuring the Nicholson Fire Truck financing terms from 3 to 5 years.

Danny Manley, CEDP, MCEM

Pearl River County Office of Emergency Services
Director

810 Highway 11 South
Poplarville, MS 39470

Phone: (601) 273-1394
Fax: (601) 795-3074

FIRST SOUTHERN BANK

"The People's Choice Community Bank"

March 18, 2021

Pearl River County Board of Supervisors
Attn: Danny Manley, Emergency Services Director

Re: Revision to Nicholson Vol. Fire Dept. pumper truck loan

Mr. Manley,

First Southern Bank has agreed to restructure the existing loan mentioned above, as per the conversation with Bobby Robbins, Danny Manley and Adrian Lumpkin. The existing amount financed of $50,000 that was set up on 3 yearly payments of $20,000 per year at a rate of 2.26% APR will now be restructured and set up on 5 yearly payments of $10,000 per year at a rate of 2.76% APR.

Once the changes have been ratified by the board, please forward a copy of the minutes to First Southern Bank. Upon receipt of the minutes approving the changes, the original loan will be cancelled and a new loan contract will be prepared on behalf of Pearl River County Board of Supervisors to be signed by Board President, Sandy K. Smith.

Any questions, please feel free to call or email me at 601-798-6439 or billyb@fsb-ms.com.

Sincerely,

Billy R. Brunson
Sr. Vice President

1321 Highway 43 N | Picayune, MS 39466 | Phone (601) 798-6438 | Fax (601) 798-2490 | www.fsb-ms.com

000161

Fund JBN

FIRST SOUTHERN BANK

"The People's Choice Community Bank"

Approved for JBN funding County CuA- for glue for Scott P 8/20/20

August 12, 2020

Pearl River County Board of Supervisors
Attn: Danny Manley, Emergency Services Director

Re: Purchase New Fire Truck

Mr. Manley,

Thank you for the opportunity to provide you with our financial services for the purchase of the new fire truck.

The total amount financed will be $50,000 with the 1st payment of $20,000 due on October 1, 2020, 2nd payment of $20,000 due on October 1, 2021 and paid in full by October 1, 2022. The financing will accrue at a fixed rate of 2.26% APR.

The indebtedness will be guaranteed and signed by Pearl River County Board of Supervisors.

Any questions, please feel free to call or email me at 601-798-6439 or billyb@fsb-ms.com.

Sincerely,

Billy R. Brunson
Sr. Vice President

1321 Highway 43 N | Picayune, MS 39466 | Phone (601) 798-6438 | Fax (601) 798-2490 | www.fsb-ms.com

ORDER TO AWARD FINANCING FOR NORTHEAST VOLUNTEER FIRE DEPARTMENT AND NICHOLSON VOLUNTEER FIRE DEPARTMENT'S TRUCKS

There came on this day to be considered by the Board of Supervisors of Pearl River County, Mississippi, the matter to award financing for Volunteer Fire Department trucks.

Upon motion made by Jason Spence and seconded by Hudson Holliday, the following order was adopted, to-wit:

Be It Ordered by the Pearl River County Board of Supervisors to award financing for Northeast Volunteer Fire Department and Nicholson Volunteer Fire Department's trucks to First Southern Bank, the best and lowest quote, on the recommendation of Emergency Services Director.

Ordered and adopted, this the 19th day of August, 2020.

Voting AYE: Donald Hart, Malcolm Perry, Hudson Holliday, and Jason Spence
Voting NAY: None

LOAN NUMBER	LOAN NAME	ACCT. NUMBER	NOTE DATE	INITIALS
9B497498	Pearl River County Board Of Supervisors		12/30/20	BB
NOTE AMOUNT	INDEX (w/Margin)	RATE	MATURITY DATE	LOAN PURPOSE
$50,000.00	Not Applicable	2.260%	10/01/23	Commercial
		Creditor Use Only		

PROMISSORY NOTE AND SECURITY AGREEMENT

(Commercial - Single Advance)

DATE AND PARTIES. The date of this Promissory Note and Security Agreement (Loan Agreement) is December 30, 2020. The parties and their addresses are:

LENDER:
FIRST SOUTHERN BANK
1321 Hwy 43 North
Picayune , MS 39466
Telephone: (601) 798-6438

BORROWER:
PEARL RIVER COUNTY BOARD OF SUPERVISORS
a Mississippi Corporation
C/O Nicholson VFD P O Box 82 ,
Nicholson, MS 39463

1. DEFINITIONS. As used in this Loan Agreement, the terms have the following meanings:

A. Pronouns. The pronouns "I," "me," and "my" refer to each Borrower signing this Loan Agreement and each other person or legal entity (including guarantors, endorsers, and sureties) who agrees to pay this Loan Agreement. "You" and "Your" refer to the Lender, any participants or syndicators, successors and assigns, or any person or company that acquires an interest in the Loan.

B. Loan Agreement. Loan Agreement refers to this combined Note and Security Agreement, and any extensions, renewals, modifications and substitutions of this Loan Agreement.

C. Loan. Loan refers to this transaction generally, including obligations and duties arising from the terms of all documents prepared or submitted for this transaction such as applications, security agreements, disclosures or notes, and this Loan Agreement.

D. Loan Documents. Loan Documents refer to all the documents executed as a part of or in connection with the Loan.

E. Property. Property is any property, real, personal or intangible, that secures my performance of the obligations of this Loan.

F. Percent. Rates and rate change limitations are expressed as annualized percentages.

G. Dollar Amounts. All dollar amounts will be payable in lawful money of the United States of America.

2. PROMISE TO PAY. For value received, I promise to pay you or your order, at your address, or at such other location as you may designate, the principal sum of $50,000.00 (Principal) plus interest from December 30, 2020 on the unpaid Principal balance until this Loan Agreement matures or this obligation is accelerated.

3. INTEREST. Interest will accrue on the unpaid Principal balance of this Loan Agreement at the rate of 2.260 percent (Interest Rate).

A. Post-Maturity Interest. After maturity or acceleration, interest will accrue on the unpaid Principal balance of this Loan Agreement at the Interest Rate in effect from time to time, until paid in full.

B. Maximum Interest Amount. Any amount assessed or collected as interest under the terms of this Loan Agreement will be limited to the maximum lawful amount of interest allowed by applicable law. Amounts collected in excess of the maximum lawful amount will be applied first to the unpaid Principal balance. Any remainder will be refunded to me.

C. Accrual. Interest accrues using an Actual/360 days counting method.

4. REMEDIAL CHARGES. In addition to interest or other finance charges, I agree that I will pay these additional fees based on my method and pattern of payment. Additional remedial charges may be described elsewhere in this Loan Agreement.

A. Late Charge. If a payment is more than 15 days late, I will be charged 4.000 percent of the Amount of Payment or $5.00, whichever is greater. However, this charge will not be greater than $50.00. I will pay this late charge promptly but only once for each late payment.

5. PAYMENT. I agree to pay this Loan Agreement on demand, but if no demand is made, I agree to pay this Loan Agreement in 3 payments. I will make 2 payments of $20,000.00 beginning on October 1, 2021, and on the same day each year thereafter. A single "balloon payment" of the entire unpaid balance of Principal and interest will be due October 1, 2023.

Payments will be rounded to the nearest $.01. With the final payment I also agree to pay any additional fees or charges owing and the amount of any advances you have made to others on my behalf. Payments scheduled to be paid on the 29th, 30th or 31st day of a month that contains no such day will, instead, be made on the last day of such month.

Each payment I make on this Loan Agreement will be applied first to escrow that is due, then to interest that is due, then to credit insurance premiums that are due, then to principal that is due, and finally to late charges that are due. If you and I agree to a different application of payments, we will describe our agreement on this Loan Agreement. You may change how payments are applied in your sole discretion without notice to me. The actual amount of my final payment will depend on my payment record.

6. PREPAYMENT. I may prepay this Loan in full or in part at any time. Any partial prepayment will not excuse any later scheduled payments until I pay in full.

7. LOAN PURPOSE. The purpose of this Loan is purchase pumper truck.

8. SECURITY. The Loan is secured by Property described in the SECURITY AGREEMENT section of this Loan Agreement.

9. SECURITY AGREEMENT.

A. Secured Debts. This Security Agreement will secure the following debts (Secured Debts), together with all extensions, renewals, refinancings, modifications and replacements of these debts:

(1) Sums Advanced under the terms of this Loan Agreement. All sums advanced and expenses incurred by you under the terms of this Loan Agreement.

(2) All Debts. All present and future debts of all Borrowers owing to you, even if this Security Agreement is not specifically referenced, the future debts are also secured by other collateral, or if the future debt is unrelated to or of a different type than this debt. If more than one person signs this Security Agreement, each agrees that it will secure debts incurred either individually or with others who may not sign this Security Agreement. Nothing in this Security Agreement constitutes a commitment to make additional or future loans or advances. Any such commitment must be in writing.

This Security Agreement will not secure any debt which is also secured by real property or for which a non-possessory, non-purchase money security interest is created in "household goods" in connection with a "consumer loan," as those terms are defined by federal law governing unfair and deceptive credit practices. In addition, this Security Agreement will not secure any other debt if, with respect to such other debt, you fail to fulfill any necessary requirements or fail to conform to any limitations of the Truth in Lending Act (Regulation Z) or the Real Estate Settlement Procedures Act (Regulation X) that are required for loans secured by the Property or if, as a result, the other debt would become subject to Section 670 of the John Warner National Defense Authorization Act for Fiscal Year 2007.

B. Limitations on Cross-collateralization. The cross-collateralization clause on any existing or future loan, but not including this Loan, is void and ineffective as to this Loan, including any extension or refinancing.

The Loan is not secured by a previously executed security instrument if a non-possessory, non-purchase money security interest is created in "household goods" in connection with a "consumer loan," as those terms are defined by federal law governing unfair and deceptive credit practices. The Loan is not secured by a previously executed security instrument if you fail to fulfill any necessary requirements or fail to conform to any limitations of the Real Estate Settlement Procedures Act, (Regulation X), that are required for loans secured by the Property or if, as a result, the other debt would become subject to Section 670 of the John Warner National Defense Authorization Act for Fiscal Year 2007.

The Loan is not secured by a previously executed security instrument if you fail to fulfill any necessary requirements or fail to conform to any limitations of the Truth in Lending Act, (Regulation Z), that are required for loans secured by the Property.

C. Security Interest. To secure the payment and performance of the Secured Debts, I grant you a security interest in all of the Property described in this Security Agreement that I own or have sufficient rights in which to transfer an interest, now or in the future, wherever the Property is or will be located, and all proceeds and products from the Property (including, but not limited to, all parts, accessories, repairs, replacements, improvements, and accessions to the Property). Property is all the collateral given as security for the Secured Debts and described in this Security Agreement, and includes all obligations that support the payment or performance of the Property. "Proceeds" includes cash proceeds, non-cash proceeds and anything acquired upon the sale, lease, license, exchange, or other disposition of the Property; any rights and claims arising from the Property; and any collections and distributions on account of the Property.

Property also includes any original evidence of title or ownership whether evidenced by a certificate of title or ownership, a manufacturer's statement of origin or other document when the Property is titled under any federal or state law. I will deliver the title documents and properly execute all title documents as necessary to reflect your security interest.

This Security Agreement remains in effect until terminated in writing, even if the Secured Debts are paid and you are no longer obligated to advance funds to me under any loan or credit agreement.

D. Property Description. The Property subject to this Security Agreement is described as follows:

(1) Motor Vehicle, Mobile Home, Sport Craft, or Trailer. A Motor Vehicle of Make: Deep South, Year: 2021, Model: Pumper, VIN: 1D9EUTAR5ML760397.

E. Duties Toward Property.

(1) Protection of Secured Party's Interest. I will defend the Property against any other claim. I agree to do whatever you require to protect your security interest and to keep your claim in the Property ahead of the claims of other creditors. I will not do anything to harm your position.

I will keep books, records and accounts about the Property and my business in general. I will let you examine these and make copies at any reasonable time. I will prepare any report or accounting you request which deals with the Property.

(2) Use, Location, and Protection of the Property. I will keep the Property in my possession and in good repair. I will use it only for commercial purposes. I will not change this specified use without your prior written consent. You have the right of reasonable access to inspect the Property and I will immediately inform you of any loss or damage to the Property. I will not cause or permit waste to the Property.

I will keep the Property at my address listed in the DATE AND PARTIES section unless we agree I may keep it at another location. If the Property is to be used in other states, I will give you a list of those states. The location of the Property is given to aid in the identification of the Property. It does not in any way limit the scope of the security interest granted to you. I will notify you in writing and obtain your prior written consent to any change in location of any of the Property. I will not use the Property in violation of any law. I will notify you in writing prior to any change in my address, name or, if an organization, any change in my identity or structure.

Until the Secured Debts are fully paid and this Security Agreement is terminated, I will not grant a security interest in any of the Property without your prior written consent. I will pay all taxes and assessments levied or assessed against me or the Property and provide timely proof of payment of these taxes and assessments upon request.

(3) Selling, Leasing or Encumbering the Property. I will not sell, offer to sell, lease, or otherwise transfer or encumber the Property without your prior written permission. Any disposition of the Property contrary to this Security Agreement will violate your rights. Your permission to sell the Property may be reasonably withheld without regard to the creditworthiness of any buyer or transferee. I will not permit the Property to be the subject of any court order affecting my rights to the Property in any action by anyone other than you. If the Property includes chattel paper or instruments, either as original collateral or as proceeds of the Property, I will note your security interest on the face of the chattel paper or instruments.

(4) Additional Duties Specific to Motor Vehicles, Sport Craft, or Trailers. So long as I am not in default under this Security Agreement, the Motor Vehicle, Sport Craft, or Trailer portion of the Property will not be restricted to a specific location and may be moved as necessary during ordinary use. However, they may not be taken out of state permanently nor removed from the United States or Canada without your prior written consent.

F. Authority To Perform. I authorize you to do anything you deem reasonably necessary to protect the Property, and perfect and continue your security interest in the Property. If I fail to perform any of my duties under this Loan Agreement or any other security interest, you are authorized, without notice to me, to perform the duties or cause them to be performed.

These authorizations include, but are not limited to, permission to:

(1) pay and discharge taxes, liens, security interests or other encumbrances at any time levied or placed on the Property.

(2) pay any rents or other charges under any lease affecting the Property.

(3) order and pay for the repair, maintenance and preservation of the Property.

(4) file any financing statements on my behalf and pay for filing and recording fees pertaining to the Property

(5) place a note on any chattel paper indicating your interest in the Property.

(6) take any action you feel necessary to realize on the Property, including performing any part of a contract or endorsing it in my name

(7) handle any suits or other proceedings involving the Property in my name.

(8) prepare, file, and sign my name to any necessary reports or accountings.

(9) make an entry on my books and records showing the existence of this Agreement.

If you perform for me, you will use reasonable care. If you exercise the care and follow the procedures that you generally apply to the collection of obligations owed to you, you will be deemed to be using reasonable care. Reasonable care will not include: any steps necessary to preserve rights against prior parties; the duty to send notices, perform services or take any other action in connection with the management of the Property; or the duty to protect, preserve or maintain any security interest given to others by me or other parties. Your authorization to perform for me will not create an obligation to perform and your failure to perform will not preclude you from exercising any other rights under the law or this Loan Agreement. All cash and non-cash proceeds of the Property may be applied by you only upon your actual receipt of cash proceeds against such of the Secured Debts, matured or unmatured, as you determine in your sole discretion.

If you come into actual or constructive possession of the Property, you will preserve and protect the Property. For purposes of this paragraph, you will be in actual possession of the Property only when you have physical, immediate and exclusive control over the Property and you have affirmatively accepted that control. You will be in constructive possession of the Property only when you have both the power and the intent to exercise control over the Property.

G. Name and Location. My name indicated in the DATE AND PARTIES section is my exact legal name. I am located at the address indicated in the DATE AND PARTIES section. I will provide verification of registration and location upon your request. I will provide you with at least 30 days notice prior to any change in my name, address, or state of organization or registration.

H. Perfection of Security Interest. I authorize you to file a financing statement and/or security agreement, as appropriate, covering the Property. I will comply with, facilitate, and otherwise assist you in connection with obtaining perfection or control over the Property for purposes of perfecting your security interest under the Uniform Commercial Code. I agree to pay all actual costs of terminating your security interest.

10. DEFAULT. I understand that you may demand payment anytime at your discretion. For example, you may demand payment in full if any of the following events (known separately and collectively as an Event of Default) occur:

A. Payments. I fail to make a payment in full when due.

B. Insolvency or Bankruptcy. The death, dissolution or insolvency of, appointment of a receiver by or on behalf of, application of any debtor relief law, the assignment for the benefit of creditors by or on behalf of, the voluntary or involuntary termination of existence by, or the commencement of any proceeding under any present or future federal or state insolvency, bankruptcy, reorganization, composition or debtor relief law by or against me or any co-signer, endorser, surety or guarantor of this Loan Agreement or any other obligations I have with you.

C. Business Termination. I merge, dissolve, reorganize, end my business or existence, or a partner or majority owner dies or is declared legally incompetent.

D. New Organizations. Without your written consent, I organize, merge into, or consolidate with an entity; acquire all or substantially all of the assets of another; materially change the legal structure, management, ownership or financial condition; or effect or enter into a domestication, conversion or interest exchange.

E. Failure to Perform. I fail to perform any condition or to keep any promise or covenant of this Loan Agreement.

F. Other Documents. A default occurs under the terms of any other Loan Document.

G. Other Agreements. I am in default on any other debt or agreement I have with you.

H. Misrepresentation. I make any verbal or written statement or provide any financial information that is untrue, inaccurate, or conceals a material fact at the time it is made or provided.

I. Judgment. I fail to satisfy or appeal any judgment against me.

J. Forfeiture. The Property is used in a manner or for a purpose that threatens confiscation by a legal authority.

K. Name Change. I change my name or assume an additional name without notifying you before making such a change.

L. Property Transfer. I transfer all or a substantial part of my money or property.

M. Property Value. You determine in good faith that the value of the Property has declined or is impaired.

N. Material Change. Without first notifying you, there is a material change in my business, including ownership, management, and financial conditions.

O. Insecurity. You determine in good faith that a material adverse change has occurred in my financial condition from the conditions set forth in my most recent financial statement before the date of this Loan Agreement or that the prospect for payment or performance of the Loan is impaired for any reason.

11. DUE ON SALE OR ENCUMBRANCE. You may, at your option, declare the entire balance of this Loan Agreement to be immediately due and payable upon the creation of, or contract for the creation of, any lien, encumbrance, transfer or sale of all or any part of the Property. This right is subject to the restrictions imposed by federal law, as applicable.

12. WAIVERS AND CONSENT. To the extent not prohibited by law, I waive protest, presentment for payment, demand, notice of acceleration, notice of intent to accelerate and notice of dishonor.

A. Additional Waivers By Borrower. In addition, I, and any party to this Loan Agreement, to the extent permitted by law, consent to certain actions you may take, and generally waive defenses that may be available based on these actions or based on the status of a party to this Loan Agreement.

(1) You may renew or extend payments on this Loan Agreement, regardless of the number of such renewals or extensions.

(2) You may release any Borrower, endorser, guarantor, surety, accommodation maker or any other co-signer.

(3) You may release, substitute or impair any Property securing this Loan Agreement.

(4) You, or any institution participating in this Loan Agreement, may invoke your right of set-off.

(5) You may enter into any sales, repurchases or participations of this Loan Agreement to any person in any amounts and I waive notice of such sales, repurchases or participations.

(6) I agree that any of us signing this Loan Agreement as a Borrower is authorized to modify the terms of this Loan Agreement or any instrument securing, guaranteeing or relating to this Loan Agreement.

B. No Waiver By Lender. Your course of dealing, or your forbearance from, or delay in, the exercise of any of your rights, remedies, privileges or right to insist upon my strict performance of any provisions contained in this Loan Agreement, shall not be construed as a waiver by you, unless any such waiver is in writing and is signed by you.

C. Waiver of Claims. I waive all claims for loss or damage caused by your acts or omissions where you acted reasonably and in good faith.

13. REMEDIES. After I default, you may at your option do any one or more of the following.

A. Acceleration. You may make all or any part of the amount owing by the terms of this Loan Agreement immediately due.

B. Sources. You may use any and all remedies you have under state or federal law or in any Loan Document.

C. Insurance Benefits. You may make a claim for any and all insurance benefits or refunds that may be available on my default.

D. Payments Made On My Behalf. Amounts advanced on my behalf will be immediately due and may be added to the balance owing under the terms of this Loan Agreement, and accrue interest at the highest post-maturity interest rate.

E. Set-Off. You may use the right of set-off. This means you may set-off any amount due and payable under the terms of this Loan Agreement against any right I have to receive money from you.

My right to receive money from you includes any deposit or share account balance I have with you; any money owed to me on an item presented to you or in your possession for collection or exchange; and any repurchase agreement or other non-deposit obligation. "Any amount due and payable under the terms of this Loan Agreement" means the total amount to which you are entitled to demand payment under the terms of this Loan Agreement at the time you set-off.

Subject to any other written contract, if my right to receive money from you is also owned by someone who has not agreed to pay this Loan Agreement, your right of set-off will apply to my interest in the obligation and to any other amounts I could withdraw on my sole request or endorsement.

Your right of set-off does not apply to an account or other obligation where my rights arise only in a representative capacity. It also does not apply to any Individual Retirement Account or other tax-deferred retirement account.

You will not be liable for the dishonor of any check when the dishonor occurs because you set-off against any of my accounts. I agree to hold you harmless from any such claims arising as a result of your exercise of your right of set-off.

F. Assembly of Property. You may require me to gather the Property and make it available to you in a reasonable fashion.

G. Repossession. You may repossess the Property so long as the repossession does not involve a breach of the peace. You may sell, lease or otherwise dispose of the Property as provided by law. You may apply what you receive from the disposition of the Property to your expenses, your attorneys' fees and legal expenses (where not prohibited by law), and any debt I owe you. If what you receive from the disposition of the Property does not satisfy the debt, I will be liable for the deficiency (where permitted by law). In some cases, you may keep the Property to satisfy the debt.

Where a notice is required, I agree that ten days prior written notice sent by first class mail to my address listed in this Loan Agreement will be reasonable notice to me under the Mississippi Uniform Commercial Code. If the Property is perishable or threatens to decline speedily in value, you may, without notice to me, dispose of any or all of the Property in a commercially reasonable manner at my expense following any commercially reasonable preparation or processing (where permitted by law).

If any items not otherwise subject to this Loan Agreement are contained in the Property when you take possession, you may hold these items for me at my risk and you will not be liable for taking possession of them (where permitted by law).

H. Use and Operation. You may enter upon my premises and take possession of all or any part of my property for the purpose of preserving the Property or its value, so long as you do not breach the peace. You may use and operate my property for the length of time you feel is necessary to protect your interest, all without payment or compensation to me.

I. Waiver. Except as otherwise required by law, by choosing any one or more of these remedies you do not give up your right to use any other remedy. You do not waive a default if you choose not to use a remedy. By electing not to use any remedy, you do not waive your right to later consider the event a default and to use any remedies if the default continues or occurs again.

14. COLLECTION EXPENSES AND ATTORNEYS' FEES. On or after the occurrence of an Event of Default, to the extent permitted by law, I agree to pay all expenses of collection, enforcement or protection of your rights and remedies under this Loan Agreement or any other Loan Document. Expenses include, but are not limited to, attorneys' fees, court costs and other legal expenses. These expenses are due and payable immediately. If not paid immediately, these expenses will bear interest from the date of payment until paid in full at the highest interest rate in effect as provided for in the terms of this Loan Agreement. All fees and expenses will be secured by the Property I have granted to you, if any. In addition, to the extent permitted by the United States Bankruptcy Code, I agree to pay the reasonable attorneys' fees incurred by you to protect your rights and interests in connection with any bankruptcy proceedings initiated by or against me.

15. COMMISSIONS. I understand and agree that you (or your affiliate) will earn commissions or fees on any insurance products, and may earn such fees on other services that I buy through you or your affiliate.

16. WARRANTIES AND REPRESENTATIONS. I make to you the following warranties and representations which will continue as long as this Loan Agreement is in effect:

A. Power. I am duly organized, and validly existing and in good standing in all jurisdictions in which I operate. I have the power and authority to enter into this transaction and to carry on my business or activity as it is now being conducted and, as applicable, am qualified to do so in each jurisdiction in which I operate.

B. Authority. The execution, delivery and performance of this Loan Agreement and the obligation evidenced by this Loan Agreement are within my powers, have been duly authorized, have received all necessary governmental approval, will not violate any provision of law, or order of court or governmental agency, and will not violate any agreement to which I am a party or to which I am or any of my Property is subject.

C. Business Name. Other than previously disclosed in writing to you I have not changed my name or principal place of business within the last 10 years and have not used any other trade or fictitious name. Without your prior written consent, I do not and will not use any other name and will preserve my existing name, trade names and franchises.

D. Ownership of Property. I represent that I own all of the Property. Your claim to the Property is ahead of the claims of any other creditor, except as disclosed in writing to you prior to any advance on the Secured Debts. I represent that I am the original owner of the Property and, if I am not, that I have provided you with a list of prior owners of the Property.

17. INSURANCE. I agree to obtain the insurance described in this Loan Agreement.

A. Property Insurance. I agree to keep the Property insured against the risks reasonably associated with the Property. I will maintain this insurance in the amounts you require. This insurance will last until the Property is released from this Loan Agreement. I may choose the insurance company, subject to your approval, which will not be unreasonably withheld.

I will have the insurance company name you as loss payee on any insurance policy. I will give you and the insurance company immediate notice of any loss. You may apply the insurance proceeds toward what is owed on the Secured Debts. You may require added security as a condition of permitting any insurance proceeds to be used to repair or replace the Property.

Wolters Kluwer Financial Services ©1996, 2020 Bankers Systems™

If you acquire the Property in damaged condition, my right to any insurance policies and proceeds will pass to you to the extent of the Secured Debts.

I will immediately notify you of cancellation or termination of insurance. If I fail to keep the Property insured, you may obtain insurance to protect your interest in the Property and I will pay for the insurance on your demand. You may demand that I pay for the insurance all at once, or you may add the insurance premiums to the balance of the Secured Debts and charge interest on it at the rate that applies to the Secured Debts. This insurance may include lesser or greater coverages than originally required of me, may be written by a company other than one I would choose, and may be written at a higher rate than I could obtain if I purchased the insurance. This insurance coverage does not satisfy any liability or property insurance that may be mandated by applicable state or federal law. I acknowledge and agree that you or one of your affiliates may receive commissions on the purchase of this insurance.

18. APPLICABLE LAW. This Loan Agreement is governed by the laws of Mississippi, the United States of America, and to the extent required, by the laws of the jurisdiction where the Property is located, except to the extent such state laws are preempted by federal law. In the event of a dispute, the exclusive forum, venue and place of jurisdiction will be in Mississippi, unless otherwise required by law.

19. JOINT AND SEVERAL LIABILITY AND SUCCESSORS. My obligation to pay the Loan is independent of the obligation of any other person who has also agreed to pay it. You may sue me alone, or anyone else who is obligated on the Loan, or any number of us together, to collect the Loan. Extending the Loan or new obligations under the Loan, will not affect my duty under the Loan and I will still be obligated to pay the Loan. This Loan Agreement shall inure to the benefit of and be enforceable by you and your successors and assigns and shall be binding upon and enforceable against me and my successors and assigns.

20. AMENDMENT, INTEGRATION AND SEVERABILITY. This Loan Agreement may not be amended or modified by oral agreement. No amendment or modification of this Loan Agreement is effective unless made in writing. This Loan Agreement and the other Loan Documents are the complete and final expression of the agreement. If any provision of this Loan Agreement is unenforceable, then the unenforceable provision will be severed and the remaining provisions will still be enforceable. No present or future agreement securing any other debt I owe you will secure the payment of this Loan if, with respect to this loan, you fail to fulfill any necessary requirements or fail to conform to any limitations of the Truth in Lending Act (Regulation Z) or the Real Estate Settlement Procedures Act (Regulation X) that are required for loans secured by the Property or if, as a result, this Loan would become subject to Section 670 of the John Warner National Defense Authorization Act for Fiscal Year 2007.

21. INTERPRETATION. Whenever used, the singular includes the plural and the plural includes the singular. The section headings are for convenience only and are not to be used to interpret or define the terms of this Loan Agreement.

22. NOTICE, FINANCIAL REPORTS AND ADDITIONAL DOCUMENTS. Unless otherwise required by law, any notice will be given by delivering it or mailing it by first class mail to the appropriate party's address listed in the DATE AND PARTIES section, or to any other address designated in writing. Notice to one Borrower will be deemed to be notice to all Borrowers. I will inform you in writing of any change in my name, address or other application information. I will provide you any correct and complete financial statements or other information you request. I agree to sign, deliver, and file any additional documents or certifications that you may consider necessary to perfect, continue, and preserve my obligations under this Loan and to confirm your lien status on any Property. Time is of the essence.

23. CREDIT INFORMATION. I agree to supply you with whatever information you reasonably request. You will make requests for this information without undue frequency, and will give me reasonable time in which to supply the information.

24. ERRORS AND OMISSIONS. I agree, if requested by you, to fully cooperate in the correction, if necessary, in the reasonable discretion of you of any and all loan closing documents so that all documents accurately describe the loan between you and me. I agree to assume all costs including by way of illustration and not limitation, actual expenses, legal fees and marketing losses for failing to reasonably comply with your requests within thirty (30) days.

25. AGREEMENT TO ARBITRATE. You or I may submit to binding arbitration any dispute, claim or other matter in question between or among you and me that arises out of or relates to this Transaction (Dispute), except as otherwise indicated in this section or as you and I agree to in writing. For purposes of this section, this Transaction includes this Loan Agreement and the other Loan Documents, and proposed loans or extensions of credit that relate to this Loan Agreement. You or I will not arbitrate any Dispute within any "core proceedings" under the United States bankruptcy laws.

You and I must consent to arbitrate any Dispute concerning a debt secured by real estate at the time of the proposed arbitration. You may foreclose or exercise any powers of sale against real property securing a debt underlying any Dispute before, during or after any arbitration. You may also enforce a debt secured by this real property and underlying the Dispute before, during or after any arbitration.

You or I may, whether or not any arbitration has begun, pursue any self-help or similar remedies, including taking property or exercising other rights under the law; seek attachment, garnishment, receivership or other provisional remedies from a court having jurisdiction to preserve the rights of or to prevent irreparable injury to you or me; or foreclose against any property by any method or take legal action to recover any property. Foreclosing or exercising a power of sale, beginning and continuing a judicial action or pursuing self-help remedies will not constitute a waiver of the right to compel arbitration.

The arbitrator will determine whether a Dispute is arbitrable. A single arbitrator will resolve any Dispute, whether individual or joint in nature, or whether based on contract, tort, or any other matter at law or in equity. The arbitrator may consolidate any Dispute with any related disputes, claims or other matters in question not arising out of this Transaction. Any court having jurisdiction may enter a judgment or decree on the arbitrator's award. The judgment or decree will be enforced as any other judgment or decree.

You and I acknowledge that the agreements, transactions or the relationships which result from the agreements or transactions between and among you and me involve interstate commerce. The United States Arbitration Act will govern the interpretation and enforcement of this section.

The American Arbitration Association's Commercial Arbitration Rules, in effect on the date of this Loan Agreement, will govern the selection of the arbitrator and the arbitration process, unless otherwise agreed to in this Loan Agreement or another writing.

26. WAIVER OF TRIAL FOR ARBITRATION. You and I understand that the parties have the right or opportunity to litigate any Dispute through a trial by judge or jury, but that the parties prefer to resolve Disputes through arbitration instead of litigation. If any Dispute is arbitrated, you and I voluntarily and knowingly waive the right to have a trial by jury or judge during the arbitration.

27. SIGNATURES. By signing, I agree to the terms contained in this Loan Agreement. I also acknowledge receipt of a copy of this Loan Agreement.

BORROWER:

Pearl River County Board Of Supervisors

By_____ Date_____
Sandy Kane Smith, President

PEARL RIVER COUNTY
DEPARTMENT OF PLANNING & DEVELOPMENT
E-911 ADDRESSING DIVISION

TO: Sandy Kane Smith (President) and Board of Supervisors

FROM: Carolyn Nelson – E-911 Coordinator

SUBJECT: **Private Road Name – SWEET HOME LN**

DATE: March 24, 2021

Dear Honorable Board of Supervisors,

This office is presenting a request on behalf of the residents, to name a private drive. The new private road name will be **Sweet Home LN** and will be coming off **HWY 26 W** at address range 2036,

A signed petition has been obtained from all property owners, who have adjoining land to the road. The signed petition(s) and a map – which reflects the road location, are attached.

The private drive will remain private and will never be brought into the county road maintenance program. The landowner will be responsible for the maintenance of the private drive and will install a road sign in agreeance with the Pearl River County E-911 Ordinance.

Thank you,

Carolyn Nelson

Enclosure(s): signature page with map

PEARL RIVER COUNTY PETITION OF PROPERTY OWNER(S) TO NAME PRIVATE ROAD

Date: March 17, 2021

This petition must be signed by all the property owner(s) whose property adjoins the new private road.

The road name cannot be more than FIFTEEN (15) characters, including spaces. No special characters, such as, hyphens or apostrophes can be used. Once the road name has been approved, THE PROPERTY OWNERS ARE RESPONSIBLE FOR PURCHASING AND ERECTING A ROAD NAME SIGN within 30 days in accordance with the Pearl River County Enhanced 911 Ordinance. Once road sign has been erected, the new addresses will be issued. The signs shall be blue with at least 3" white reflective letters. Non-Compliance may result in a $50.00 fine per property owner, I(we), the property owner(s) request the following private road name:

SWEET HOME LN

I(we) understand the reason for this request is to improve the emergency response to my (our) residence(s) and that my (our) current address(es) will change. I(we) understand that this is a private road and will not be maintained by Pearl River County.

316307000000 2301 Tax Map Parcel Number	516308000000215 Tax Map Parcel Number
Raye Lynn Arbo Signature	Zennis Wood Signature
Raye Lynn Arbo 985-290-1727 Print Name	Zennis Wood Print Name
516308000000215 Tax Map Parcel Number	216307000000 2300 Tax Map Parcel Number
Eskaletha Wood Signature	Vernon Signature
Eskaletha Wood Print Name	Vernon Culpepper 463-1248 Print Name

Culpepper Construction@yahoo.com

The Pearl River County E-911 Addressing Office has verified each property owner(s) signature(s) regarding this matter.

Signature	3/24/2021 Date

PEARL RIVER COUNTY PETITION OF PROPERTY OWNER(S) TO NAME PRIVATE ROAD

Date: March 17, 2021

This petition must be signed by all the property owner(s) whose property adjoins the new private road.

The road name cannot be more than FIFTEEN (15) characters, including spaces. No special characters, such as, hyphens or apostrophes can be used. Once the road name has been approved, THE PROPERTY OWNERS ARE RESPONSIBLE FOR PURCHASING AND ERECTING A ROAD NAME SIGN within 30 days in accordance with the Pearl River County Enhanced 911 Ordinance. Once road sign has been erected, the new addresses will be issued. The signs shall be blue with at least 3" white reflective letters. Non-Compliance may result in a $50.00 fine per property owner, I(we), the property owner(s) request the following private road name:

SWEET HOME LN

I(we) understand the reason for this request is to improve the emergency response to my (our) residence(s) and that my (our) current address(es) will change. I(we) understand that this is a private road and will not be maintained by Pearl River County.

216 307 000000 2300 Tax Map Parcel Number	Tax Map Parcel Number
Signature	Signature
Kelvie Culpepper Print Name	Print Name
Tax Map Parcel Number	Tax Map Parcel Number
Signature	Signature
Print Name	Print Name

The Pearl River County E-911 Addressing Office has verified each property owner(s) signature(s) regarding this matter.

Signature

3/24/2021
Date

SWEET HOME LN
HWY 26 W
1995 - 2162

Lower Pearl River Valley Foundation

505 Williams Avenue
Picayune, Mississippi 39466
email: lprvf@bellsouth.net
Tel: 601.799.5353 · Fax: 601.799.5116

March 19, 2021

Mr. Sandy Kane Smith
President
Pearl River County Board of Supervisors
Post Office Box 569
Poplarville, Mississippi 39470

Dear Mr. Smith:

I am pleased to advise you that at their March 18, 2021 meeting, the Lower Pearl River Valley Foundation's Board of Directors authorized a grant in the amount of $41,097 for the *Replace Non-Compliant Self Contained Breathing Apparatus* (for Crossroads Volunteer Fire Department) project.

Attached is a Grant Agreement. If you, your board, or staff has any questions about this grant and the conditions under which it is made as stated in the Grant Agreement, please call me at 601-799-5353.

If the Pearl River County Board of Supervisors (for Crossroads Volunteer Fire Department grant) is willing to accept this grant and the Grant Agreement, please indicate your acceptance by signing the Grant Agreement as indicated. Please return one (1) signed Grant Agreement. A second original of the Grant Agreement is enclosed for your files.

The Lower Pearl River Valley Foundation is pleased to be of assistance as the parties involved in this effort work toward a plan to assist in a better quality of life for the citizens in Pearl River County.

Sincerely,

Clyde Dease Jr.

Clyde Dease, Jr.
CEO/President

CD/ar

Attachment (Grant Agreement, 2 copies)

c LPRVF Board of Directors
Mr. Adrain Lumpkin
Mr. Fred Jarrell, President, CVFD
Mr. Scott Sullivan, Chief, CVFD

GRANT AGREEMENT

between

Pearl River County Board of Supervisors
(for Crossroads Volunteer Fire Department)

and

Lower Pearl River Valley Foundation

March 19, 2021

1. PURPOSE: This grant in the amount of **$41,097** will be used for the ***Replace Non-Compliant Self Contained Breathing Apparatus*** project as described in the proposal submitted to Lower Pearl River Valley Foundation by the Pearl River County Board of Supervisors (for Crossroads Volunteer Fire Department).

2. ADMINISTRATION: The conduct and administration of this project as well as all aspects of the fiscal management of this grant are the sole responsibility and under the sole control of the Pearl River County Board of Supervisors (for Crossroads Volunteer Fire Department). No member, director, officer, or employee of Lower Pearl River Valley Foundation shall be involved in decisions concerning grant disbursement.

3. SELF-DEALING: The grant must not be used to benefit any individual, organization, or partnership that would be described by the Internal Revenue Code as a "disqualified person" with respect to Lower Pearl River Valley Foundation. "Disqualified persons" include the members, directors, officers, and employees of Lower Pearl River Valley Foundation and any spouse, ancestor, lineal descendant or spouse of lineal descendant, of the directors, officers, and employees. At the present time these directors, officers, and employees include Clyde Dease, Pamela Thomas, Tom Clark, Rebecca Askew, Barbara Alexander, Ray Scott, and Alice Rachal. The term "disqualified person" also includes certain government officials.

   The foregoing listing of "disqualified persons" is not exhaustive and may change from time to time. Therefore, should you have any questions concerning the "disqualified person" status of any individual, organization, or partnership because of a relationship to Lower Pearl River Valley Foundation, you must contact the Foundation for further information.

4. LOBBYING: The grant must not be used in any way to carry on propaganda or otherwise attempt to influence legislation except as permitted by Section 4945 (d) and (e) or other sections and regulations of the U. S. Internal Code.

5. TAX-EXEMPT STATUS: According to documents on file with Lower Pearl River Valley Foundation, your organization is classified by the U. S. Internal Revenue Service as exempt from federal taxes under Section 501(c)(3) of the U. S. Internal Revenue Code or because your organization is a division of federal, state, or local government. If this is not the case, or if your organization's tax-exempt status has changed, or does change in the future, you must notify Lower Pearl River Valley Foundation immediately.

6. FOUNDATION STATUS: A private foundation must not make a grant to another private foundation without exercising "expenditure responsibility" as prescribed by the U. S. Internal Revenue Code. According to documents on file with Lower Pearl River Valley Foundation, your organization is not a private foundation. If your organization is currently classified by the U. S. Internal Revenue Service as a private foundation, or is so classified in the future, Lower Pearl River Valley Foundation must be notified immediately.

7. GRANT AGREEMENT: Please return one signed original Grant Agreement to Lower Pearl River Valley Foundation. The second original Grant Agreement is for your records.

8. PRESS RELEASE: Pearl River County Board of Supervisors (for Crossroads Volunteer Fire Department) must publish information relative to the grant in the form of a press release to all local media. Lower Pearl River Valley Foundation will assist your organization with this process.

9. REPORTING and DISBURSEMENT(s):
At the conclusion of any activities/purchases funded by this grant, submit a narrative report along with a financial report (itemized record of expenditures). The reports should be a maximum of one page each. After the equipment has been received at the Crossroads Volunteer Fire Department, a written request in the form of a cover letter must be submitted for the disbursement of grant funds, and should accompany any report due at that time. The reports and request for disbursement should be sent via email to arachallprvf@att.net.
Quarterly reporting dates for this project's timeline are: April 15, 2021 and July 15, 2021.
A final narrative report for this project is due by October 15, 2021.

Clyde Dease, Jr.
Lower Pearl River Valley Foundation

Pearl River County Board of Supervisors hereby accepts this grant and agrees to abide by all conditions under which it is made as stated in this Grant Agreement of March 19, 2021. I have full authority to accept on behalf of Pearl River County Board of Supervisors this Grant Agreement and all conditions therein.

Sandy Kane Smith
Pearl River County

SANDY KANE SMITH
President, District Five
MALCOLM PERRY
Vice-President, District Two
DONALD HART
District One

PEARL RIVER COUNTY
MISSISSIPPI
Est. 1890

HUDSON HOLLIDAY
District Three
JASON SPENCE
District Four
MELINDA BOWMAN
Clerk of Board

000175

BOARD OF SUPERVISORS
PEARL RIVER COUNTY
P.O. BOX 569
POPLARVILLE, MS 39470
(601) 403-2300
(601) 403-2309 Fax
ADRAIN LUMPKIN, JR.
County Administrator

April 5, 2021

To Whom It May Concern:

This letter is to serve as notice that Pearl River County will provide fuel for the generator at the Pearl River County Hospital & Nursing Home in case of emergency as long as Pearl River County has fuel available. If you need any further information or explanation please feel free to call.

Sincerely,

Adrain Lumpkin, Jr.
County Administrator

Mike Marshall
Maintenance Director
Pearl River County Hospital & Nursing Home

James Williams
Administrator
Pearl River County Hospital & Nursing Home

SANDY KANE SMITH
President, District Five
MALCOLM PERRY
Vice-President, District Two
DONALD HART
District One

PEARL RIVER COUNTY
MISSISSIPPI
Est. 1890

HUDSON HOLLIDAY
District Three
JASON SPENCE
District Four
MELINDA BOWMAN
Clerk of Board

000176

BOARD OF SUPERVISORS
PEARL RIVER COUNTY
P.O. BOX 569
POPLARVILLE, MS 39470
(601) 403-2300
(601) 403-2309 Fax
ADRAIN LUMPKIN, JR.
County Administrator

April 5, 2021

To Whom It May Concern:

This letter is to serve as notice that Pearl River County will provide water at the Pearl River County Hospital & Nursing Home in case of emergency as long as Pearl River County has water available. If you need any further information or explanation please feel free to call.

Sincerely,

Adrain Lumpkin, Jr.
County Administrator

Mike Marshall
Maintenance Director
Pearl River County Hospital & Nursing Home

James Williams
Administrator
Pearl River County Hospital & Nursing Home

MISSISSIPPI STATE UNIVERSITY™
EXTENSION

Pearl River County

March 25, 2021

Dear Board of Supervisors:

I am requesting the Board approve the following to be added to the Pearl River County Fair Committee:

Laurie Lombardino Jaufre
Cindy Lee
Jennifer Moeller
Connie Williams
Brandi Kirkland

Sincerely,

Eddie M. L. Smith, Ph.D.
County Coordinator & Extension Agent

cc: Adrain Lumpkin

Mississippi State University Extension Service
401 W. Lamar Street • Poplarville, MS 39470 • Phone (601) 403-2280 • (601) 798-9358 • Fax (601) 795-0651

We are an equal opportunity employer, and all qualified applicants will receive consideration for employment without regard to race, color, religion, sex, national origin, disability status, protected veteran status, or any other characteristic protected by law.

Pearl River County Fair Committee Members

Fair Committee Advisors:
Adrain Lumpkin, County Administrator
Eddie Smith, County Coordinator/Extension Agent
Dawn Vosbein, Extension Agent
Alex Shook, Extension Agent

2018-2021 Fair Committee Members:
Betina Dodd
Beti Spangel
Lavonne Stringer

2021-2024 Fair Committee Members:
Laurie Lombardino Jaufre
Cindy Lee
Jennifer Moeller
Connie Williams
Brandi Kirkland

FOXWORTH, SHEPARD & BRUHL, P.A.
ATTORNEYS AT LAW
702 MAIN STREET
P.O. BOX 747
COLUMBIA, MISSISSIPPI 39429
Telephone: (601) 736-1122 – Telecopier: (601) 736-1713

000179

R. ANDREW FOXWORTH
D. RYAN BRUHL

RICHARD D. FOXWORTH (1935-2005)
JOSEPH M. SHEPARD, Of Counsel
TERESA P. JOHNSON, Of Counsel

March 18, 2021

VIA CERTIFIED MAIL
RECEIPT NUMBER 7018 1830 0000 3046 0957

ATTENTION: BOARD OF SUPERVISORS
Pearl River County, Mississippi
Post Office Box 431
Poplarville, Mississippi 39470

Re: Amendment to Marion County, Mississippi, Solid Waste Management Plan

Gentlemen:

The Marion County Board of Supervisors has prepared and is considering the adoption of an amendment to its Solid Waste Management Plan heretofore adopted on July 6, 1992, in accordance with Section 17-17-201 of the Mississippi Code of 1972, as amended. This notice is being given pursuant to the requirements of Section 17-17-227 of the Mississippi Code of 1972, as amended. I have enclosed herein a copy of the Public Notice being published in the Columbian-Progress, setting the 30 day comment period through April 19, 2021, at 10:00 a.m. A public hearing on the proposal will also be held on April 19, 2021, at 10:00 a.m. in the Board Room of the Marion County Board of Supervisors, 215 Broad Street, Columbia, Mississippi 39429.

Should you have any questions or need any additional information, please do not hesitate to contact me.

With warmest regards, I am

Very truly yours,

FOXWORTH, SHEPARD & BRUHL, P.A.

R. Andrew Foxworth

RAF/bw
Enclosures
cc: MC Environmental, LLC
Jeff Dungan, County Engineer

MARION COUNTY PUBLIC NOTICE

PROPOSED AMENDMENT TO SOLID WASTE MANAGEMENT PLAN

Marion County, Mississippi, proposes to amend its Solid Waste Management Plan as adopted on July 6, 1992, and all subsequent amendments thereto, in accordance with Section 17-17-201 of the Mississippi Code of 1972, as amended, by permitting a new Class I Rubbish Site/Facility in Sections 18 and 19, Township 3 North, Range 17 West, and in Section 13, Township 3 North, Range 18 West, Marion County, Mississippi.

MC Environmental, LLC, 60 Dyess Circle, Columbia, Mississippi 39429, is the Applicant requesting the amendment so as to allow the location of a new Class I Rubbish Site/Facility within a 443 acre parcel of property that is located in Sections 18 and 19, Township 3 North, Range 17 West, and Section 13, Township 3 North, Range 18 West, Marion County, Mississippi. The size of the facility will be approximately 339 acres and will be located within the previously mentioned 443 acre parcel boundaries. The property is located north of Columbia-Purvis Road and has a property address of 971 Columbia-Purvis Road, Columbia, Mississippi 39429.

The proposed new facility will be owned and operated by MC Environmental, LLC, and it will receive, store and process typical Class I Rubbish materials from commercial and governmental sources within a 120 mile radius of the proposed facility.

A public hearing will be held to discuss the proposed amendment to the Marion County, Mississippi, Solid Waste Management Plan at 10:00 a.m. (CST), on Monday, April 19, 2021, in the Boardroom of the Marion County Board of Supervisors, 215 Broad Street, Columbia, Mississippi 39429. A copy of the proposed Amendment to the Solid Waste Management Plan will be available for review at the Office of the Marion County Board of Supervisors from Monday, March 15, 2021, through Monday, April 19, 2021, for public review. Written comments will be received by and may be submitted to the Board of Supervisors of Marion County, Mississippi, at the aforementioned address, until the date and time of the aforesaid hearing on April 19, 2021, at 10:00 a.m. (CST).

3/25/2021

Sent via: lfowler@pearlrivercounty.net

Pearl River County, MS

It is a pleasure to submit for your consideration the following proposal to provide lease-purchase financing based on the terms and conditions set forth below:

1. Lessor:	BancorpSouth Equipment Finance, a division of BancorpSouth Bank
2. Lessee:	Pearl River County, MS
3. Equipment Description:	Four (4) New Ford ¾ Ton PickUp Trucks
4. Equipment Cost:	$106,752.00
5. Lease Term:	48 Months
6. Lease Payments:	(These are approximate payment amounts. The actual payment will be determined at funding date.) 48 monthly payments of $2,331.87 arrears
7. Lease Rate:	2.34%
8. Funding Date:	This proposal is contingent upon the equipment being delivered and the lease funded prior to increase **in current prime rate of 3.25%.** Any extension of the funding or delivery date must be in writing.
9. Purchase Option:	Title is passed to Lessee at lease expiration for no further consideration.

10. Non-appropriation/Termination: The lease provides that Lessee is to make reasonable efforts to obtain funds to satisfy the obligation in each fiscal year. However, the lease may be terminated without penalty in the event of non-appropriation. In such event, the Lessee agrees to provide an attorney's opinion confirming the events of non-appropriation and Lessee's exercise of diligence to obtain funds.

11. Bank Qualification: This lease-purchase financing shall be designated as a bank qualified tax-exempt transaction as per the 1986 Federal Tax Bill. **This means that the Lessee's governing body will pass a resolution stating that it does not anticipate issuing more than $10 million in General Obligation debt or other debt falling under the Tax Bill's definition of qualifying debt during the calendar year that the lease is funded.**

12. Tax Status: This proposal is subject to the Lessee being qualified as a governmental entity or "political subdivision" within the meaning of Section 103(a) of the Internal Revenue Code of 1954 as amended, within the meaning of said Section. Lessee agrees to cooperate with Lessor in providing evidence as deemed necessary or desirable by Lessor to substantiate such tax status.

13. Net Lease: This will be a net lease transaction whereby maintenance, insurance, taxes (if applicable), compliance with laws and similar expenses shall be borne by Lessee.

14. Financial Statements: Complete and current financial statements must be submitted to Lessor for review and approval of Lessee creditworthiness

15. Lease Documentation: This equipment lease-purchase package is subject to the mutual acceptance of lease-purchase documentation within a reasonable time period, otherwise payments will be subject to market change.

If the foregoing is acceptable, please so indicate by signing this letter in the space provided below and returning it to BancorpSouth Equipment Finance. **The proposal is subject to approval by BancorpSouth Equipment Finance's Credit Committee and to mutually acceptable terms, conditions and documentation.**

Acceptance of this proposal expires as the close of business on 4/30/2021. Extensions must be approved by the undersigned.

Any concerns or questions should be directed to Jonathan King at 228-223-4642 or Jonathan.King@BXS.com.

Jonathan King

Jonathan King
Municipal Territory Manager

ACKNOWLEDGMENT AND ACCEPTANCE

By: _____ Co Adm
Title

Date: 4-5-2021

First Government Lease Co.

Lease Purchase Agreement

000183

Lessor:

First Government Lease Co.
P.O. Box 8331
Northfield, IL 60093-8331
866.793.9670 or 847.441.5684
Fax 847.441.5012
info@firstgovernment.com

Lessee:

Name: **PEARL RIVER COUNTY SHERIFF'S DEPARTMENT.**

Address: 171 Savannah Millard Rd

City: Poplarville State: MS Zip: 39470

Phone: 601-798-5528

Description of Equipment: **4 2021 Ford Truck**

Total Cash Price	**$ 106,752.00**	Number of Pmts. (Term): **(48 Monthly)**	
Less Down Pmt.	$_____	Amt. of each Pmt.	**$ 3,104.70**
Net	$_____	Lease Beginning Date	**04/01/21**
Interest & A.P.R.	**$ 42,273.79**	First Payment Due Date	**06/01/21**
Total Lease Price	**$ 149,025.79**		

Lessor hereby leases to lessee that certain equipment described above, subject to the terms, provisions, conditions and agreements of this lease hereinafter set forth:

1. Said equipment is leased beginning and for the Term specified above.
2. Lessee agrees to pay lessor one monthly payment specified above on the Lease Beginning Date and equal successive monthly payments until an amount equal to the total lease price specified above has been paid. Any amount due under this Lease which is past due more than ten (10) days shall be subject to a multiple time late payment charge of $100 per occurrence plus an amount equal to ten percent (10%) of the amount past due.
3. Lessee agrees to a Revenue Pledge whereas any revenues derived from operations is payable firstly to this Lease Purchase Agreement. Lessee agrees to an Ad Valorem Pledge whereas any state or local government tax based on the value of real property, as determined by the county tax assessor, is first applied to this Lease Purchase Agreement.
4. Lessee may purchase said equipment at any time during the lease term for the total lease price, less any payment already made and also less a portion of the lease service fee according to a schedule furnished on request by lessor to lessee, shall constitute purchase of the equipment. Also payment of all the monthly payments when due shall automatically constitute purchase of said equipment effective on the last day of the lease period.
5. Lessee may cancel this Lease Purchase Agreement only with Lessor's written approval at any time within; the first 90 days of lease by giving written notice to Lessor and returning said equipment to Lessor, or to its order, in good condition as received, less normal wear, tear and depreciation. Upon such proper return, Lessee shall have no obligation to make payments coming due after the notice period.
6. Lessee, at its own cost and expense, shall keep the equipment in good repair, condition and working order and shall furnish any and all parts, mechanism and devices required to keep the equipment in good mechanical and working order. Lessee hereby assumes and shall bear the entire risk of loss and damage to the equipment from any and every cause whatsoever. No loss or damage to the equipment or any part thereof, shall impair any obligation of Lessee under this lease which shall continue in full force and effect. Lessee hereby appoints Lessor as Lessee's attorney in fact with full power to do all things to protect and further Lessee's and Lessor's agreement as set forth herein, including but not limited to, signing and filing UCC's, title applications and taking such other actions as Lessor deems reasonable and necessary. Lessee is obliged within 60 days of the Lease Beginning Date to provide a original duplicate title to Lessor, failing to provide a duplicate title within 60 days of Lease Beginning Date is an event of default.
7. If Lessee with regard to any item or items of equipment fails to pay any rent or other amount herein provided with 60 days after the same is due and payable, or if Lessee with regard to any item or items of equipment fails to observe, keep or perform any other provision of this lease required to be observed, kept or performed by Lessee, Lessor shall have the right to exercise any one or more of the following remedies: a. To declare the entire amount of rent hereunder immediately due and payable as to any or all items of equipment, without notice or demand to Lessee. b. To sue for and recover all rents, and other payments then accrued or thereafter accruing, with respect to any or all items of equipment. c. To take possession of any or all items of equipment without demand or notice, wherever same may be located, without any court order or other process law. d. To terminate this lease as to any or all items of equipment. e. To pursue any other remedy at law or in equity, notwithstanding any said repossession, or any other action which Lessor may take, Lessee shall be and remain liable for the full performance of all obligations on the part of Lessee to be performed under this lease. f. Lessee further agrees to pay all attorneys' fees incurred by Lessor in enforcing Lessor's rights under this agreement. All such remedies are cumulative, and may be exercised concurrently or separately.
8. Lessee intends to do all things lawful within its power to obtain and maintain funds from which payments may be made, including making provision for such payments to the extent necessary in each periodic budget submitted and adopted in accordance with applicable provisions of state and local law, to have such portion of the budget approved and to exhaust all available reviews and appeals in the event such portion of the budget is not approved. Lessee reasonably believes that legally available funds in an amount sufficient to make all Lease Payments during the term can be obtained. After a no appropriation, the Lessee may not use other property or equipment to perform the same, or substantially similar, services for a period of one year.
9. Upon commencement of the Term, title to the equipment shall pass to Lessee from vendor or supplier. Lessee hereby grants a security interest in the equipment described herein, and the proceeds thereof to Lessor.
10. Lessee agrees to bring any judicial action arising directly or indirectly in connection with this agreement or any transaction covered hereby only in Courts located within Cook County, IL. Lessee also consents and submits to the jurisdiction of any State or Federal Court located within Cook County, IL. The choice of law shall be IL.
11. I certify that I am duly authorized to act within the powers of my office by executing this Lease Agreement, and the equipment being financed is essential to its governmental mission.
12. Lessee agrees to produce yearly balance sheets & income statement information to Lessor within 90 days of fiscal year end.

In witness whereof, the parties hereto have executed this lease this 01 day of APRIL 2021.

By_____ _____/_____/**BORAD PRESIDENT**

First Government Lease Co. (Lessee Signature) (Print Signature and Title)

As Counsel for Lessee, I acknowledge that I have reviewed this Lease Purchase Agreement, the extract of any enabling minutes, and all necessary proceedings taken by the Lessee to authorize and execute this Lease Purchase Agreement, and therefor, I am of the opinion: a. The lessee is a duly constituted public corporation and political subdivision of the State referred to above, and b. This Lease Purchase Agreement has been duly authorized, executed and delivered by an authorized representative of the Lessee and is enforceable against the Lessee in accordance with its terms and conditions, and c. this Lease Purchase Agreement is a legal, valid and binding obligation of the Lessee.

_____/_____/**TREASURER**

(Counsel Lessee) (Print Signature and Title)

ORDER TO APPROVE TRAVEL

There came on this day to be considered by the Board of Supervisors of Pearl River County, Mississippi, the matter of travel for county employees and officials.

Upon motion made by Hudson Holliday and seconded by Donald Hart, the following order was adopted, to-wit:

Be It Ordered by the Pearl River County Board of Supervisors to approve travel for the following listed officials and county employees to attend various workshops, seminars and meetings listed below and that reimbursement for any expenses incurred be and is hereby approved, including, but not limited to, travel, meals, lodging registration fees and other expenses incidental to said workshops, seminars, and meetings.

Richelle Lumpkin, Tara Kellar, Scott Hillery, Lisa McGloflin, Mona Martin, Tonya Tynes to Hope Focused Court Training in Oxford, MS on April 12-13, 2021

Sharon Cox and Heidi Spear, Central Dispatch to Training in Pearl, MS on May 10-14, 2021

Melinda Bowman to Chancery Clerks Association Judicial College Conference in Jackson, MS on April 7-9 ,2021

Melinda Bowman to Chancery Clerks Spring Educational Workshop in Jackson, MS on April 21-22, 2021

County Officials to MAS Annual Convention in Biloxi, MS on June 14-17,2021

County Administrator, Adrain Lumpkin, Jr. to MAS Spring Educational Workshop in Jackson, MS on April 21-22, 2021

Cindy Smith, Veterans Service Officer to event at Harrison County Courthouse on April 29, 2021

Neil Dugas and Shane Edgar to Accident Reconstruction Level 3 in DeSoto, MS on April 12-23, 2021

(CONTINUED ON NEXT PAGE)

Jerry Fleming to Detective Level 1 in Gulfport, MS on May 17-21, 2021

Nathan Davis and Jeff Horner to Handgun/Shotgun Instructor Training in Columbia, MS on April 26-30, 2021

Carolyn Nelson and Teasha Ritchie to 2021 Floodplain Managers Conference in Natchez, MS on May 3-5, 2021

Sandy Kane Smith to 2021 Floodplain Managers Conference in Natchez, MS on May 3-5, 2021

Ordered and adopted, this the 5th day of April, 2021.

Voting AYE: Donald Hart, Malcolm Perry, Hudson Holliday, Jason Spence, and Sandy Kane Smith
Voting NAY: None

STATE *of* MISSISSIPPI

Tonya Tynes, CCA
Court Administrator
Mona Martin, CCA
Youth Court Administrator
Ashley Lee, CSR
Court Reporter
Chelsey Maywalt
Staff Attorney

PEARL RIVER COUNTY

Judge Richelle Lumpkin
County and Youth Court

Post Office Box 1746
Picayune, MS 39466

Phone: 601-749-7720
Fax: 601-749-7725

March 24, 2021

To: The Honorable Board of Supervisors of Pearl River County, Mississippi

Please acknowledge upon the minutes the following matters concerning the County Court Department.

In and for your consideration, approval of lodging, travel fees, costs and expenses associated with the following training:

Name:	Richelle Lumpkin, Tara Kellar, Scott Hillery, Lisa McGloflin, Mona Martin and Tonya Tynes
Position:	County/Youth Court Judge and Staff
When:	April 12-13, 2021
Where:	Hope Focused Court Training Oxford Conference Center 102 Ed Perry Blvd. Oxford, MS 39655

Please acknowledge upon the minutes the following personnel matters concerning the County/Youth Court Department.

Thank you,

Richelle Lumpkin,
Pearl River County Court Judge

PEARL RIVER COUNTY
MISSISSIPPI
Est. 1890

Pearl River County Central Dispatch

March 25, 2021

To: The Honorable Board of Supervisors of Pearl River County, Mississippi.

Please acknowledge upon the minutes the following request for travel concerning the Pearl River County Central Dispatch employees identified herein.

Employees Sharon Cox and Heidi Spear need to attend the training detailed in the next page for TAC certification for the purpose of keeping the PRC Dispatch in compliance with NCIC policy and procedures.

As noted, the training is provided at no cost. The county will be responsible for expenses associated with attending the training in Pearl, MS on May 10-14, 2021.

Thank you,

Carey Meitzler, Director

STATE OF MISSISSIPPI
TATE REEVES, GOVERNOR
DEPARTMENT OF PUBLIC SAFETY
SEAN J. TINDELL, COMMISSIONER

Mach 17, 2021

Chief Bryan Dawsey
Picayune Police Department
328 South Main Street
Picayune, MS 39466

Dear Chief Dawsey

To comply with NCIC policy and procedures, the Criminal Information Center (CIC) will be hosting a Full Certification class May 10-14, 2021 beginning at 08:30 a.m. and ending at approximately 5:00 p.m. each day. Attire for the school should be business casual no shorts. There is no charge for the class, but each agency will be responsible for the cost of lodging and meals.

It is strongly recommended that Sharon Cox attend this certification class. Please sign the enclosed registration form and mail or fax to Criminal Information Center, 3891 Hwy 468 West, Pearl, Mississippi 39208, Fax number 601-933-2662 no later than April 21, 2021.

Reservations may be made with one of the following listed below hotels, or at another location of your choice. Please request state rates when making reservations.

Best Western Airport Inn 601-936-2060
Holiday Inn Express.....601-936-7005
Ramada Limited Airport.....601-933-1122
Hampton Inn Pearl/Jackson Airport.....800-257-9640
La Quinta Inn & Suites Brandon.....601-591-1045
Super 8 by Wyndham.....800-454-3213

If you have any questions, please call MJIC Training Staff at 1-800-594-3997. Thank you for your participation in this class.

Kenneth E. Gunter
NCIC Training Coordinator
Interim CJIS Systems Officer

MELINDA SMITH BOWMAN
PEARL RIVER COUNTY CHANCERY CLERK

March 18, 2021

TO: Pearl River County Board of Supervisors
FROM: Melinda Bowman, Chancery Clerk

RE: Request for authorization for travel in April

Chancery Clerk Melinda Bowman to travel to two separate conferences at the Hilton Hotel and Conference Center, Jackson, MS:

- MS Chancery Clerks Association Judicial College—April 7-9, 2021
- MS Chancery Clerks Association Spring Educational Workshop—April 21-22, 2021

200 SOUTH MAIN STREET ❖ P.O. BOX 431 ❖ POPLARVILLE, MS 39470 ❖ (601) 403-2316 ❖ FAX: (601) 403-2317

Mississippi Association of Supervisors
793 N. President Street, Jackson, Mississippi 39202
Office 601.353.2741 ~ Fax 601.353.2749
www.mssupervisors.org

ASSOCIATION OF SUPERVISORS
MISSISSIPPI

MEMORANDUM

To: MAS Membership

From: Derrick Surrette, Executive Director
Yamaiky Gamez, Member Services Coordinator

Date: March 25, 2021

Re: 2021 Annual Convention
June 14-17, 2021
Biloxi, Harrison County, MS

Registration for MAS' 92nd Annual Convention is now open! Return the enclosed registration form by mail *(793 N President Street, Jackson MS, 39202)*, fax *(601.353.2749)*, or email Stephanie Spangler at SSpangler@massup.org.

EARLY BIRD DISCOUNT: County Supervisors (MAS Active Members) and MAS Associate Members registering before April 12 will receive an **early bird discount** on the attendance fee (**$415** early bird and **$475 regular registration** after April 12). Member Registration forms received after May 14 (*late registration*) will be **$575** and onsite registration is **$625** per person. Please note registration forms received at the MAS office after June 4 will be processed onsite. Please go to the registration desk onsite to have your name badge made.

CANCELLATION POLICY: Cancellations received between **May 15** and **May 28** will be assessed a cancellation fee equal to ¼ of the registration cost. Cancellations received after **May 28** will be assessed a cancellation fee equal to ½ of the registration cost.

HOTEL BLOCKS: Hotel blocks open **9:00 a.m., Monday, March 29.** Rates, cutoff dates, and other hotel information are included on the enclosed registration form. Hotel reservations should be made directly with the hotel of your choice. **MAS block rates may not be available before March 29 or after cutoff date.**

AGENDA: Please see the enclosed Tentative Agenda for convention activities and schedule.

HONORS CEREMONY: The 2021 Honors Ceremony **will be held at the Beau Rivage** Thursday, June 18. As a reminder, the Honors Ceremony combines the traditional Prayer Breakfast and Transition of Officers luncheon into one event.

Questions? Contact Yamaiky Gamez at YGamez@massup.org or 601.353.2741

MISSISSIPPI ASSOCIATION OF SUPERVISORS

92ND ANNUAL CONVENTION | JUNE 14-17,2021
MS COAST CONVENTION CENTER | BILOXI, MS

ASSOCIATION OF SUPERVISORS MISSISSIPPI

TENTATIVE AGENDA

All meetings will be held at Mississippi Coast Convention Center unless otherwise noted in red.
Name badges required to enter all meeting and exhibit areas.

MONDAY, JUNE 14, 2021

1:00 p.m. – 4:00 p.m.	Registration Opens
5:00 p.m. – 7:00 p.m.	Early Bird Reception

TUESDAY, JUNE 15,2021

8:30 a.m. – 3:00 p.m.	Registration Opens
9:30 a.m. – 10:30 a.m.	Educational Breakout Session
10:45 a.m. – 12:00 p.m.	MAS Annual Membership Meeting MASIT Annual Membership Meeting
11:30 a.m. – 4:00 p.m.	Exhibit Hall Opens
11:45 a.m. – 1:00 p.m.	**Luncheon on Exhibit Floor**
1:00 p.m. – 4:00 p.m.	Educational Breakout Sessions

WEDNESDAY, JUNE 16,2021

8:00 a.m. – 2:00 p.m.	Registration Opens
8:00 a.m. – 9:15 a.m.	**Breakfast on Exhibit Floor**
8:00 a.m. – 3:00 p.m.	Exhibit Hall Opens
9:30 a.m.	General Assembly/Educational Sessions
11:30 a.m. – 1:00 p.m.	**Luncheon on Exhibit Floor**
1:00 p.m. – 3:00 p.m.	Educational Breakout Sessions

THURSDAY, JUNE 17,2021

8:30 a.m.	MAS Honors Ceremony
6:00 p.m. – 8:00 p.m.	MAS Annual Cookout

AFFILIATE GROUP MEETINGS

TUESDAY, JUNE 15- WEDNESDAY, JUNE 16, 2021

MS Assn of County Board Attorneys
MS Assn of County Administrations & Comptrollers
MS Assn of County Road Managers
MS Assn of County Engineers
MS Assn of Planning and Development Districts

TENTATIVE AGENDA

MISSISSIPPI ASSOCIATION OF SUPERVISORS

92ND ANNUAL CONVENTION | JUNE 14-17, 2021
MS COAST CONVENTION CENTER | BILOXI, MS

ASSOCIATION OF SUPERVISORS MISSISSIPPI

000191

COUNTY OFFICIAL REGISTRATION FORM

Mail to: MS Association of Supervisors
793 N. President Street
Jackson, MS 39202

Attn: Stephanie Spangler
Fax to: 601.353.2749
Email to: SSpangler@massup.org

County Name: _____ Purchase Order: _____ Date: _____

Completed By: _____ Title: _____

Registration Rates: Rate based on date form is received in the MAS Office. Pre-payment not required.
Member*: $415 Early Bird (before April 12) $475 Regular (by May 14) |$575 Late Registration (after May 14) | $625 Onsite Registration *(June 13-17,2021)*
** Member rates available for County Supervisors (Active Members) and Associate Members only.*
Non-Member: $495 Regular (by May 14) | $595 Late Registration (after May 14) | $675 Onsite Registration

****** If you are a county employee, you cannot register as a spouse/guest. ******

Name (as printed on name badge): _____
Title/Office: _____ Email: _____
Guest/Spouse Name: _____

Name (as printed on name badge): _____
Title/Office: _____ Email: _____
Guest/Spouse Name: _____

Name (as printed on name badge): _____
Title/Office: _____ Email: _____
Guest/Spouse Name: _____

Name (as printed on name badge): _____
Title/Office: _____ Email: _____
Guest/Spouse Name: _____

Name (as printed on name badge): _____
Title/Office: _____ Email: _____
Guest/Spouse Name: _____

* * * * *

Total Registration Fees: $_____ ☐ Check Enclosed (No. _____) ☐ Bill County
Bill to Attention: _____ Title: _____
Email: _____ Phone: _____

Registration forms received at the MAS office after June 4 will be processed onsite. Please go to the registration desk onsite to have your name badge made.

MISSISSIPPI ASSOCIATION OF SUPERVISORS

92ND ANNUAL CONVENTION | JUNE 14-17, 2021
MS COAST CONVENTION CENTER | BILOXI, MS

ASSOCIATION OF SUPERVISORS
MISSISSIPPI

000192

HOTEL RESERVATIONS

- Hotel blocks open at 9:00 a.m. on **Monday, March 29** Conference rate may not be available before March 29 after cutoff date(s).
- You must request MAS rate ***at the time reservation is made*** to guarantee block rates. Rates cannot be changed at check-in or check-out. Block rates are subject to sales tax and resort fees (vary by property).
- Any county making direct bill arrangements (sub-block) with hotel may be subject to attrition rates if county cancels rooms after MAS block closes.
- You must confirm required deposit, cancellation, early check-out, early departure and other policies with hotel.
- You must confirm tax exemption payment requirements with hotel at the time reservation is made.

Beau Rivage: *875 Beach Blvd, Biloxi, MS 39530*
Rate.....$174
Cutoff Date .....May 17, 2021
Phone: 888.567.6667 .....Group code: **MAS**
https://book.passkey.com/e/49842428

South Beach Biloxi Hotel & Suites:
1735 Beach Blvd, Biloxi, MS 39531
Rate.....$149 - $179
Cutoff Date .....May 9, 2021
Phone: 228.206.0579..... Group code: **MSAS**

White House Hotel:
1230 Beach Blvd, Biloxi, MS 39530
Rate.....$169 - $219
Cutoff Date .....May 13,2021
Phone : 228-271.6348 .....Group Code: **MAS**

IP Casino : *850 Bayview Ave, Biloxi, MS 39530*
Rate.....$99.99
Cutoff Date .....May 23,2021
Phone: 888.946.2847 #1.....Group Code: **S210110**
Online: www.ipbiloxi.com/groups

Hotel Legends: *674 Beach Blvd, Biloxi, MS 39530*
Rate.....$179
Cutoff Date .....May 13, 2021
Phone: 228-400-4001 ..... Group code: **MAS21**

Margaritaville: *195 Beach Blvd, Biloxi, MS 39530*
Rate.....$169
Cutoff Date .....May 13, 2021
Phone: 228.271.6348.....Group Code: **MAS**

Golden Nugget: *151 Beach Blvd, Biloxi, MS 39530*
Rate.....$139-$159
Cutoff Date .....May 23, 2021
Phone: 800.777.7568 Group Code: **S21033**
https://goldennuggetbiloxi.reztrip.com/ext/promoRate?property=1262&mode=b&pm=true&sr=616225&vr=3

Doubletree Hilton:
940 Beach Blvd, Biloxi, MS 39530
Rate.....$129-$139
Cutoff Date .....May 14,2021
Phone: 228.546.3100 .....Group Code: **MAS 2021**
http://group.doubletree.com/MSAssnSupervisors

CANCELLATION POLICY FOR COUNTY OFFICIALS

- **Early Cancellation**: If notice of cancellation is received from date of registration to ***May 14, 2021***, no cancellation fee will be assessed.
- **14-Day Cancellation**: If notice of cancellation is received ***May 15 – 28, 2021***, a cancellation fee equal to **one-fourth (1/4)** of the registration cost will be assessed, based on original registration fee.
- **Late Cancellation**: If notice of cancellation is received ***after May 28, 2020***, a cancellation fee equal to **one-half (1/2)** of the registration cost will be assessed, based on original registration fee.

Registration forms received at the MAS office after June 4 will be processed onsite. Please go to the registration desk onsite to have your name badge made.

SANDY KANE SMITH
President, District Five
MALCOLM PERRY
Vice-President, District Two
DONALD HART
District One

PEARL RIVER COUNTY
MISSISSIPPI
Est. 1890

HUDSON HOLLIDAY
District Three
JASON SPENCE
District Four
MELINDA BOWMAN
Clerk of Board

BOARD OF SUPERVISORS
PEARL RIVER COUNTY
P.O. BOX 569
POPLARVILLE, MS 39470
(601) 403-2300
(601) 403-2309 Fax
ADRAIN LUMPKIN, JR.
County Administrator

March 26, 2021

Board of Supervisors,

Please approve the attached travel for the County Administrator to go to Jackson on April 21-22, 2021 for the MAS Spring Educational Workshop.

Sincerely,

Adrain

MISSISSIPPI STATE UNIVERSITY™
EXTENSION

Center for Government
& Community Development

March 17, 2021

Memorandum

TO: Members of the Mississippi Chancery Clerks Association and Mississippi Association of County Administrators/Comptrollers

FROM: Sumner Davis, Sumner Davis
Center Head, Center for Government & Community Development

SUBJECT: Agenda & Registration Form for Spring Educational Workshop

Enclosed is the agenda-in-brief for the joint Chancery Clerk and County Administrator/Comptroller Spring Educational Workshop. The workshop will be held at the Hilton Hotel & Conference Center, in Jackson, on April 21-22, 2021. We have also enclosed a registration form.

Make your room reservations by calling the Hilton Hotel & Conference Center, **(601) 957-2800**. When making your reservation, please indicate that you are part of the Chancery Clerk/County Administrator group.

Please let us know if there is anything we can do to assist you. The Center for Government & Community Development, Mississippi State University Extension Service is always pleased to assist with the educational programming for your associations.

We look forward to seeing all of you in Jackson on April 21-22.

Enclosures (2)

sd

Mississippi State University Extension Service
Box 9643 • Mississippi State, MS 39762-9643 • (662) 325-3141 • Fax (662) 325-8954 • gcd@ext.msstate.edu

We are an equal opportunity employer, and all qualified applicants will receive consideration for employment without regard to race, color, religion, sex, national origin, disability status, protected veteran status, or any other characteristic protected by law.

Registration Form
Spring Educational Workshop
April 21-22, 2021

Mail by April 15, 2021, to Sumner Davis, Extension Center for Government & Community Development, Box 9643, Mississippi State, MS 39762-9643.

Register me for the Spring Educational Workshop to be held at the Hilton Hotel & Conference Center, Jackson. I have enclosed a check for $50.00 to cover the registration fee for the workshop. (Make checks payable to: Center for Government & Community Development.)

NOTE: THE REGISTRATION FEE FOR CHANCERY CLERKS IS PAID BY THEIR ASSOCIATION. CHANCERY CLERKS DO NOT NEED TO SEND A CHECK WITH THEIR REGISTRATION FORM.

PLEASE PRINT

NAME Adrain Lumpkin TITLE Co. Administrator

ADDRESS P.O. Box 569 COUNTY Pearl River

CITY Poplarville STATE MS ZIP 39470

Make your room reservation directly by calling the Hilton Hotel & Conference Center, **(601) 957-2800**. A block of rooms has been reserved for the night of the 21st at the rate of $111 (paid by county check). Be sure to tell them you are with the county administrator/chancery clerk group when making your reservation.

NOTE: Persons with disabilities who require special accommodation of any sort in connection with their attendance at this program should contact the Center for Government & Community Development.

Mississippi Chancery Clerks Association
Mississippi Association of County Administrators/Comptrollers

April 21-22, 2021
Hilton Hotel & Conference Center
Jackson, Mississippi

SPRING EDUCATIONAL WORKSHOP

Wednesday, April 21

a.m.

10:00-12:00	Registration
12:00	Lunch on your own

Combined Session MCCA/MACAC

p.m.

1:00	Education Program
5:00	Adjournment

Thursday, April 22

Chancery Clerks Association

a.m.

9:00	Educational Program
11:00	MCCA Business Meeting
Noon	Workshop Evaluation and Adjournment

County Administrator/Comptroller Association

a.m.

9:00	Educational Program
11:00	MACAC Business Meeting
Noon	Workshop Evaluation and Adjournment

Cindy Lee

From: Cindy Smith
Sent: Friday, March 26, 2021 1:21 PM
To: Cindy Lee
Subject: FW: VA Town Hall April 29, 2021 8:00-12:00 Location Harrison County Courthouse Biloxi and Gulfport

Cindy can you put this on the board agenda for travel. VA Regional Office is hosting a virtual event in Biloxi / Gulfport. I have been asked to participate in the event. I will be working between Gulfport Court House and Biloxi.

From: Julia M. Encalade <vetoff2@co.harrison.ms.us>
Sent: Friday, March 26, 2021 10:38 AM
To: Cindy Smith <cindys@pearlrivercounty.net>
Subject: VA Town Hall April 29, 2021 8:00-12:00 Location Harrison County Courthouse Biloxi and Gulfport

Cindy,

On April 29, 2021 Harrison County will be hosting an event with the Regional VA office in Jackson, I am requesting that you please attend and give your input from Pearl River County. I will send the agenda as soon as it comes available, as you know if could be the day of the event.

Julia Encalade,
Harrison County Veterans Service Officer
(228) 435-8271
Cell (228) 236-7391

000198

PEARL RIVER COUNTY SHERIFF'S DEPARTMENT
DAVID ALLISON, SHERIFF
200 SOUTH MAIN STREET
POPLARVILLE, MS 39470
Phone: (601) 403-2500
Fax: (601) 403-2344

March 31, 2021

To: The Honorable Board of Supervisors of Pearl River County, Mississippi.

Please acknowledge upon the minutes the following matters concerning the Sheriff's Department.

In and for your consideration approval of travel, issuance of check for registration and reimbursement of costs associated with the following training.

Name:	Neil Dugas Shane Edgar
What:	Accident Reconstruction – Level 3
When:	April 12 – 23, 2021
Where:	DeSoto County Sheriff's Department DeSoto, MS
Cost:	$1,400.00 ($700.00 each)

Please mail check payable to: DeSoto County Sheriff's Department
3091 Industrial Drive W
Hernando, MS 38632

Hotel: Will pay for hotel and present receipt for reimbursement

Dugas and Edgar will travel in county assigned unit.

Thank You,

David Allison, Sheriff

In God We Trust

000199

DeSoto County Sheriff's Department
3091 Industrial Drive West
Hernando, MS 38632
662-469-8027
Bill Rasco - Sheriff

INVOICE

Date: March 11, 2021
INVOICE # R12021-14

To Pearl River County Sheriff's Department
Via Email: rrasmusson@pearlrivercounty.net

Qty	Description	Unit Price	Line Total
(1)	Accident Reconstruction Level 3 – Shane Edgar 12APR2021 – 23APR2021	$700	$700
(1)	Accident Reconstruction Level 3 – Neil Dugas 12APR2021 – 23APR2021	$700	$700
		Subtotal	$1,400
		Sales Tax	0
		Total	$1,400

Make all checks payable to: DeSoto County Sheriff's Department

Thank you for your business!

000200

PEARL RIVER COUNTY SHERIFF'S DEPARTMENT
DAVID ALLISON, SHERIFF
200 SOUTH MAIN STREET
POPLARVILLE, MS 39470
Phone: (601) 403-2500
Fax: (601) 403-2344

March 31, 2021

To: The Honorable Board of Supervisors of Pearl River County, Mississippi.

Please acknowledge upon the minutes the following matters concerning the Sheriff's Department.

In and for your consideration approval of travel, issuance of check for registration and reimbursement of costs associated with the following training.

Name:	Jerry Fleming
What:	Detective Level I
When:	May 17 – 21, 2021
Where:	Harrison County Law Enforcement Training Academy Gulfport, MS
Cost:	$549.00

Mail Check To: Global Police Solutions, LLC
Post Office Box 216
Conway, SC 29528

Fleming will travel in his county assigned vehicle.

Thank You,

David Allison, Sheriff

In God We Trust

000201

Global Police Solutions, LLC
Post Office Box 216
Conway, South Carolina 29528
Tele (855) 4GPSTRAINING

Invoice No. 2021195

INVOICE:

Customer
Name __ **Pearl River County Sheriff's Department** **Date** **March 11, 2021**____
Address __ **200 S. Main Street**_____
City _ **Poplarville** _____ **State**__**MS**__ **ZIP**_**39470**_
Phone __**(601) 403-2538** _____

Qty	Description	Price	TOTAL
1	**"Detective Level I course" Hosted by the Harrison County LE Training Academy May 17-21, 2021.** **1) Jerry Flemming** **Checks can be mailed to:** **Global Police Solutions, LLC** **Post Office Box 216** **Conway, SC 29528**	$549.00	
	*****DUE UPON RECEIPT*****	**TOTAL:**	**$549.00**

Global Police Solutions, LLC, is a premier international law enforcement and security training provider that strives to achieve results that exceed expectations through our commitment to our clients by "Instilling Professionalism through Training"

THANK YOU FOR THE OPPORTUNITY TO SERVE YOU!

000202

PEARL RIVER COUNTY SHERIFF'S DEPARTMENT
DAVID ALLISON, SHERIFF
200 SOUTH MAIN STREET
POPLARVILLE, MS 39470
Phone: (601) 403-2500
Fax: (601) 403-2344

March 31, 2021

To: The Honorable Board of Supervisors of Pearl River County, Mississippi.

Please acknowledge upon the minutes the following matters concerning the Sheriff's Department.

In and for your consideration approval of travel, issuance of check for registration and reimbursement of costs associated with the following training.

Name:	Nathan Davis
	Jeff Horner
What:	Handgun/Shotgun Instructor
When:	April 26 - 30, 2021
Where:	Columbia, MS
Cost:	$1,000.00 ($500.00 each

Mail Check To: Columbia Law Enforcement Training Academy
182 Partnership Way
Columbia, MS 39429

Both will travel in their county assigned units.

Thank You,

David Allison, Sheriff

In God We Trust

000203

INVOICE

Columbia Law Enforcement Training Academy
182 Partnership Way
Suite A
Columbia, MS 39429
Phone (601)633-5166

March 18, 2021

TO

Pearl River County Sheriff's Office
Attn: Rebecca Rasmusson
200 S Julia St. Street
Poplarville, MS 39470

Description	Amount
Handgun/Shotgun Instructor – April 26 – 30, 2021 ($500.00 x 2)	$1000.00
Nathan Davis	
Jeff Horner	

Total

$1000.00

ORDER TO CLOSE SESSION

There came on this day to be considered by the Board of Supervisors of Pearl River County, Mississippi, the matter to close session.

Upon motion made by Malcolm Perry and seconded by Donald Hart, the following order was adopted, to-wit:

Be It Ordered by the Pearl River County Board of Supervisors to close session to determine the need for executive session.

Ordered and adopted, this the 5th day of April, 2021.

Voting AYE: Donald Hart, Malcolm Perry, Hudson Holliday, Jason Spence, and Sandy Kane Smith
Voting NAY: None

ORDER TO ENTER EXECUTIVE SESSION

Upon motion made by Malcolm Perry and seconded by Jason Spence, the following order was adopted, to-wit:

Be It Ordered by the Pearl River County Board of Supervisors to enter executive session at 10:20 a.m. to discuss matters covered under 25-41-7 of the Mississippi Code of 1972, items covered under Section 4(a) Transaction of business and discussion of personnel matters relating to the job performance, character, professional competence, or physical or mental health of a person holding a specific position.

Ordered and adopted, this the 5th day of April, 2021.

Voting AYE: Donald Hart, Malcolm Perry, Hudson Holliday, Jason Spence, and Sandy Kane Smith
Voting NAY: None

Minute Book Text Detail
Book 0216 Page 205 RETURN TO REGULAR SESSION
Date 4/ 5/2021

ORDER TO RETURN TO REGULAR SESSION

Upon motion made by Donald Hart and seconded by Hudson Holliday, the following order was adopted, to-wit:

Be It Ordered by the Pearl River County Board of Supervisors that this Board does now return to regular session at 12:15 p.m. after taking no action in executive session.

Ordered and adopted, this the 5th day of April, 2021.

Voting AYE: Donald Hart, Malcolm Perry, Hudson Holliday, Jason Spence, and Sandy Kane Smith
Voting NAY: None

Minute Book Text Detail
Book 0216 Page 206 ADVERTISE FOR SINGLE AXLE DUMP TRUCKS
Date 4/ 5/2021

ORDER TO AUTHORIZE PURCHASE CLERK TO ADVERTISE PER STATE LAW 37-7-13 MS CODE 1972 FOR ONE (1) OR MORE SINGLE AXLE 26,000 GVW DUMP TRUCKS AS PER ATTACHED SPECIFICATIONS

There came on this day to be considered by the Board of Supervisors of Pearl River County, Mississippi, the matter to advertise for single axle dump trucks.

Upon motion made by Hudson Holliday and seconded by Malcolm Perry, the following order was adopted, to-wit:

Be It Ordered by the Pearl River County Board of Supervisors to authorize Purchase Clerk to advertise per State Law 37-7-13 MS Code 1972, for one (1) or more single axle 26,000 GVW Dump Trucks as per attached specifications.

Ordered and adopted, this the 5th day of April, 2021.

Voting AYE: Donald Hart, Malcolm Perry, Hudson Holliday, Jason Spence, and Sandy Kane Smith
Voting NAY: None

Pearl River County Board of Supervisors

SINGLE AXLE DUMP TRUCKS

BIDDER SHALL COMPLETE BY CHECKING THE FOLLOWING.
IF NOT COMPLIANT, STATE SPECIFICALLY ITEM BEING OFFERED.

Pearl River County Board of Supervisors intends to use the Reverse Auction process to purchase one (1) or more 2022 or newer Single Axle 26,000 GVW Dump Truck(s). This contract shall be valid until January 1, 2026. Purchase price shall be valid for two calendar year(s) and after the second year the awarding vendor may apply up to three (3) percent inflation price increase. All bids must be equal in performance and quality pursuant to the bid specifications below, which are not intended to exclude any manufacturer's standard deviation. Any reference to manufacture's make or series of equipment stated in the following specifications is intended only to establish an acceptable standard and is not intended to limit the bidding. Pearl River County Board of Supervisors is acting under the authority of Section 31-7-13, Miss. Code of 1972 Amended, and reserves the right to reject any and all bids.

	YES	NO	OFFERED
ENGINE & EQUIPMENT			
New & Unused 2022 or Newer	☐	☐	_____
Conventional Cab	☐	☐	_____
ENGINE & EQUIPMENT			
280 HP Engine or greater with turbo exhaust brake	☐	☐	_____
660 lb/ft Torque or greater	☐	☐	_____
7 Liter Engine liter displacement or greater (no exceptions)	☐	☐	_____
Oil cooler	☐	☐	_____
18.7 air compressors or greater	☐	☐	_____
Dry-type firewall mounted air cleaner with filter restriction indicator	☐	☐	_____
2-Speed fan hub	☐	☐	_____
1000 sq/in Cooling module or greater	☐	☐	_____
Radiator bug screen on back side of hood grill	☐	☐	_____
Horizontal Series Exhaust	☐	☐	_____
Fleetguard filter/water separator	☐	☐	_____
160 AMP Alternator	☐	☐	_____
Two (2) batteries – 2100-2190 CCA dual purpose	☐	☐	_____

	YES	NO	OFFERED
12-Volt light system with circuit protection	☐	☐	_____
12-Volt Starter	☐	☐	_____
Body builder harness to end of frame	☐	☐	_____
TRANSMISSION & EQUIPMENT			
Allison 3500RDS series 6-speed automatic transmission	☐	☐	_____
Heat exchanger	☐	☐	_____
Oil level sensor	☐	☐	_____
Transmission PTO Rear Support Spring(s)	☐	☐	_____
Driveline: 2 Dana Spicer 1710 with, 1 centerbearing or equal	☐	☐	_____
Torque converter	☐	☐	_____
Park brake auto neutral	☐	☐	_____
FRONT AXLE & EQUIPMENT			
10k front axle, Dana Spicer E-10021L or equal Meritor Brand	☐	☐	_____
15" x 4" Cast drum brakes	☐	☐	_____
Aluminum 10-bolt hub pilot LMS hubs with hub caps	☐	☐	_____
Front oil seals	☐	☐	_____
Front slack adjusters	☐	☐	_____
10k. Taperleaf front springs	☐	☐	_____
Front shock absorbers	☐	☐	_____
Single gear power steering	☐	☐	_____
REAR AXLE & EQUIPMENT			
22k Rear axle rated @16k (for 26,000 GVW no CDL required)	☐	☐	_____
Rear axle ratio: 5.29-5.57	☐	☐	_____
16 ½" x 7" Cast drum brakes	☐	☐	_____
Iron 10-bolt hub pilot hubs	☐	☐	_____
Rear slack adjusters	☐	☐	_____
Rear oil seals	☐	☐	_____
Single spring brake 2430	☐	☐	_____
Bendix 4S/4M Anti-lock brake system	☐	☐	_____
20k. suspension	☐	☐	_____
TIRES & WHEELS			
Front tires: 295/75R22.5	☐	☐	_____
Rear tires: 295/75R22.5	☐	☐	_____

000209

	YES	NO	OFFERED
Front wheels: Steel Wheels	☐	☐	_____
Rear wheels: Steel wheels	☐	☐	_____
FRAME & EQUIPMENT			
10 5/8" x 5/16" Steel frame	☐	☐	_____
1,776,000RBM or greater	☐	☐	_____
120,000 PSI Yield steel	☐	☐	_____
Section modulus: 14.80 in	☐	☐	_____
Aerodynamic bumper, painted	☐	☐	_____
Two removable front tow hooks	☐	☐	_____
FUEL TANK(S) & EQUIPMENT			
56 Gallon minimum or greater aluminum fuel tank (no exceptions)	☐	☐	_____
Minimum of 11 Gallon DEF tank; LH mount no exceptions	☐	☐	_____
CAB & EQUIPMENT			
Fully-Hucked bolted Aluminum or equivalent in Steel Cab	☐	☐	_____
Aluminum Bulkhead doors or steel equivalent	☐	☐	_____
Heater with integral defroster and A/C	☐	☐	_____
Adjustable telescoping tilt steering column (no exceptions)	☐	☐	_____
Dash mounted air filter restriction gauge	☐	☐	_____
Transmission oil temperature gauge	☐	☐	_____
No dog house protruding inside cab	☐	☐	_____
Tachometer	☐	☐	_____
Fuel gauge	☐	☐	_____
Engine coolant temperature gauge	☐	☐	_____
Engine oil pressure gauge	☐	☐	_____
Voltmeter	☐	☐	_____
Engine hour meter	☐	☐	_____
Primary and secondary air restriction gauges	☐	☐	_____
DEF fluid level gauge	☐	☐	_____
Air driver seat	☐	☐	_____
passenger seat	☐	☐	_____
AM/FM/WB/USB/BT Radio Must have Bluetooth	☐	☐	_____
Cab access grab handles, LH & RH	☐	☐	_____
Daylight doors with RH peeper window	☐	☐	_____

	YES	NO	OFFERED
Air horn; LH top of room mount	☐	☐	_____
Manual LH and electric RH door window	☐	☐	_____
Dual halogen headlights	☐	☐	_____
Exterior Stainless steel sun visor	☐	☐	_____
Fender mounted turn signal lights	☐	☐	_____
Circuit breakers replacing all but 5-amp fuses	☐	☐	_____
Bendix AD-IS air dryer, heated; mounted LH rail back of cab	☐	☐	_____
Moisture drain valve with pull cable drain	☐	☐	_____
PAINT			
Color: white	☐	☐	_____

Additional Requirements:

Delivery Date: 90 days from receival of PO no exceptions

Proposals exceeding 26,000 GVW will not be accepted.

Body Specifications

Body Length 10'
Side Height Rear 30"
Side Height Front 30"
Tailgate Height 38"
Front Height 38"
Frame Style 6" C-Channel w/3" C-Channel on 12" Centers
Front Style STRAIGHT
Rear Style STRAIGHT
Front Exhaust Notch NO
Water level capacity 7 yd
Front & tailgate capacity 8 yd
Side Material SHEET -10GA-A36
Front Material SHEET -10GA-A36
Tailgate Material SHEET -10GA-A36
Floor Material 3/16
Cabshield Standard
Cabshield Protection 18

Cabshield Width 85
Tarp Style Mountain
Hyd tank Aluminum side mount
Tailgate Type double acting
Horizontal Side Brace Corregated sides
Side Top Rail Style 4x4x.120
Dump Apron Size 8”
Side Light Cutouts Lower Front
Pintle hook with glad hands
Black Metal Boards

NOTICE OF INVITATION TO BID

Notice is hereby given that sealed or electronic bids will be received by the Board of Supervisors of Pearl River County, Mississippi for the purpose of purchasing: **ONE (1) OR MORE 2022 OR NEWER SINGLE AXLE 26,000 GVW DUMP TRUCK(S)**.

Unpriced bid proposals will be accepted until 10:00a.m. on Monday, May 3, 2021 at the office of the Pearl River County Administrator, 207 West Pearl Street, Poplarville, Mississippi, 39470, or by electronic bid submission at www.centralbidding.com. Proposals should be sealed and clearly marked on the outside of the envelope as indicated: **ONE (1) OR MORE 2022 OR NEWER SINGLE AXLE 26,000 GVW DUMP TRUCK(S)**.

Bid Specifications and Procedures may be obtained by contacting the Pearl River County Administrator's Office at (601)403-2308, located at 207 West Pearl Street, Poplarville, 39470 on Monday through Friday between the hours of 8:00a.m. and 5:00p.m. or may be obtained at www.centralbidding.com.

For any questions relating to electronic downloads and submittals and/or the bidding process, please call Central Bidding at (225)810-4814.

Submitted proposals will be evaluated and vendors submitting acceptable bids/proposals will be invited to submit PRICED BIDS.

FINAL BIDDING WILL BE HELD BY ELECTRONIC REVERSE AUCTION ON THURSDAY, MAY 6, 2021 AT www.centralbidding.com. Sealed bids may be submitted in the office of Pearl River County Administrator, 207 West Pearl Street, Poplarville, Mississippi, 39470, on Thursday, May 6, 2021 between the hours of 11:00a.m. and 12:00p.m. and will be included in the "live" reverse auction.

The Board expressly reserves the right to accept or reject any or all bids, or any part of any or all bids based on a lowest and best bid determination in the best interest of the County. The Board reserves the right to waive informalities.

WITNESS my signature this the 5th day of April, 2021.

_____

Melinda Smith Bowman, Chancery Clerk

SO ORDERED this the 5th day of April, 2021.

PEARL RIVER COUNTY
BOARD OF SUPERVISORS

PLEASE PUBLISH ON WEDNESDAY, APRIL 14TH AND APRIL 21ST, 2021.

PUBLIC NOTICE

NOTICE OF INVITATION TO BID

Notice is hereby given that sealed or electronic bids will be received by the Board of Supervisors of Pearl River County, Mississippi for the purpose of purchasing: **ONE (1) OR MORE 2022 OR NEWER SINGLE AXLE 26,000 GVW DUMP TRUCK(S)**.

Unpriced bid proposals will be accepted until 10:00a.m. on Monday, May 3, 2021 at the office of the Pearl River County Administrator, 207 West Pearl Street, Poplarville, Mississippi, 39470, or by electronic bid submission at www.centralbidding.com. Proposals should be sealed and clearly marked on the outside of the envelope as indicated: **ONE (1) OR MORE 2022 OR NEWER SINGLE AXLE 26,000 GVW DUMP TRUCK(S)**.

Bid Specifications and Procedures may be obtained by contacting the Pearl River County Administrator's Office at (601)403-2308, located at 207 West Pearl Street, Poplarville, 39470 on Monday through Friday between the hours of 8:00a.m. and 5:00p.m. or may be obtained at www.centralbidding.com.

For any questions relating to electronic downloads and submittals and/or the bidding process, please call Central Bidding at (225)810-4814.

Submitted proposals will be evaluated and vendors submitting acceptable bids/proposals will be invited to submit PRICED BIDS.

FINAL BIDDING WILL BE HELD BY ELECTRONIC REVERSE AUCTION ON THURSDAY, MAY 6, 2021 AT www.centralbidding.com. Sealed bids may be submitted in the office of Pearl River County Administrator, 207 West Pearl Street, Poplarville, Mississippi, 39470, on Thursday, May 6, 2021 between the hours of 11:00a.m. and 12:00p.m. and will be included in the "live" reverse auction.

The Board expressly reserves the right to accept or reject any or all bids, or any part of any or all bids based on a lowest and best bid determination in the best interest of the County. The Board reserves the right to waive informalities.

WITNESS my signature this the 5th day of April, 2021.

Melinda Smith Bowman, Chancery Clerk

SO ORDERED this the 5th day of April, 2021.

PEARL RIVER COUNTY
BOARD OF SUPERVISORS

Picayune Item:
Apr. 14 and 21, 2021
BIDS/DUMP TRUCK(S)

Minute Book Text Detail
Book 0216 Page 214 CATERPILLAR 299BD
Date 4/ 5/2021

ORDER TO ISSUE PURCHASE ORDER AS PER SOURCEWELL CONTRACT NUMBER 032119-CAT AND MS STATE CONTRACT NUMBER 8200036742 FOR ONE (1) CATERPILLAR 299D3 WITH ATTACHMENTS TO PUCKETT RENTS PER ATTACHED DOCUMENTS

There came on this day to be considered by the Board of Supervisors of Pearl River County, Mississippi, the matter to purchase Caterpillar 299DB.

Upon motion made by Donald Hart and seconded by Malcolm Perry, the following order was adopted, to-wit:

Be It Ordered by the Pearl River County Board of Supervisors to issue Purchase Order as per Sourcewell Contract Number 032119-CAT and MS State Contract Number 8200036742 for one (1) Caterpillar 299D3 with attachments to Puckett Rents per attached documents.

Ordered and adopted, this the 5th day of April, 2021.

Voting AYE: Donald Hart, Malcolm Perry, Hudson Holliday, Jason Spence, and Sandy Kane Smith
Voting NAY: None

Puckett Rents CAT THE Rental STORE

SOURCEWELL QUOTE

We are pleased to make the following proposal for your consideration. The machine includes all standard equipment, plus the options listed below. Any changes in equipment configuration will affect the quotation price.

Prepared For: PEARL RIVER COUNTY

Date of Bid: April 5, 2021
Expires: May 4, 2021

Member No:

Quantity	Product	Asset No	Description
1	Caterpillar 299D3		299D3 CTL DCA6 CAB PACKAGE, ULTRA INCLUDING: HYDRAULICS, PERFORMANCE, (H3) CONTROL, ISO, PROP, WT LIGHTS, LED RUBBER BELT, 2 SPD, TF IDLERS ROPS, ENCLOSED WITH A/C (C3) DISPLAY, ADVANCED, LCD, CAMERA FAN, COOLING, DEMAND, REVERSING RADIO, AM/FM, BLUETOOTH DOOR, CAB, POLYCARBONATE QUICK COUPLER, HYDRAULIC PRODUCT LINK, CELLULAR TRACK, RUBBER,450MM(17.7IN)BLCK 80" GP BUCKET PC306 WITH 42G TANK SPRINKLER KIT CV119 ROLLER 80" MP BUCKET BA118 HYD BROOM

Options:

Terms: Net Cash due upon receipt of invoice.

SOURCEWELLContract Number:	032119-CAT
Caterpillar Supplier Number:	3102045342
MS State Contract Number:	8200036742

Warranty: 24 month 2,000 hour total machine standard warranty

Availability: Delivery can be made within 60-90 days from the date of the order.

List Price:	$154,949.00
SOURCEWELL Discount:	($29,351.85)
Adjusted Sales Price:	$125,597.15
Trade-In Allowance:	
Approximate Trade-In Payoff*:	
PR Inventory Reduction Discount:	($13,279.75)
Freight, Prep, and Delivery:	$513.00
Total proposed Sales Price**	$112,830.40

Thank you for this opportunity. We look forward to continued business with you.

Sincerely,

JOSH PARKER
Sales Representative
Cell: (601) 750-7373

*Payoff on Trade-In is an approximate figure. Actual payoff will be calculated at the time of sale.

**Applicable sales tax will be in addition to prices quoted.

Cat® Vibratory Compactors

SKID STEER LOADERS
MULTI TERRAIN LOADERS
COMPACT TRACK LOADERS
COMPACT WHEEL LOADERS

Cat® Vibratory Compactors are used for compacting soil, sand or gravel prior to pouring concrete or laying asphalt surfaces. They are also ideal for asphalt patch work. Their capabilities and lower investment and maintenance costs make them popular with pavers, general contractors and utility contractors in residential, commercial or industrial applications.

Features:

Caterpillar exclusive vibratory pod design

- Caterpillar exclusive vibratory pod design delivers desired balance between frequency and amplitude to provide a superior matte finish. Pod-style weight housings are factory sealed for longer bearing life and easy serviceability.

Higher compaction forces

- Higher compaction forces provide twice the compaction force of the original design requiring fewer passes for greater productivity.

Replaceable rubber mounts

- Replaceable rubber mounts isolate vibration and enhance vibratory capabilities.

Durable high-strength steel drums

- Durable high-strength steel drums are roll formed and finish welded for a smoother surface and longer life.

Pivoting interface

- Pivoting interface allows the drum to oscillate ±15° and follow the contour of the ground.

Spring-loaded dual direction non-metallic scraper bar

- Spring-loaded dual direction non-metallic scraper bar maintains constant pressure on the drum to prevent material build up. Non-metallic design minimizes noise.

Cat XT™-3 ES hose, couplings and O-ring face seals

- Cat XT-3 ES hose, couplings and O-ring face seals provide superior, leak-free performance and reliability. All hoses are wrapped with nylon woven cordura sleeving for added operator protection. Hydraulic quick disconnects enable fast tool changes.

Quick coupler

- Rugged, opposing edge design holds the work tool securely and allows the operator to quickly change from one high performance Cat Work Tool to another.

Compatibility

Model	Machines
CV16B	216B3, 226D, 232D, 236D, 239D, 242D, 246D, 249D, 257D, 259D, 262D, 272D2, 272D2 XHP, 277D, 279D, 287D, 289D, 297D2, 297D2 XHP, 299D2, 299D2 XHP, 903C2, 906K, 907K, 908K, 906M, 907M, 908M
CV18B	226D, 232D, 236D, 239D, 242D, 246D, 249D, 257D, 259D, 262D, 272D2, 272D2 XHP, 277D, 279D, 287D, 289D, 297D2, 297D2 XHP, 299D2, 299D2 XHP, 903C2, 906K, 907K, 908K, 906M, 907M, 908M

Machine model availability and attachment vary by region. Please contact your local dealer for availability.

Specifications

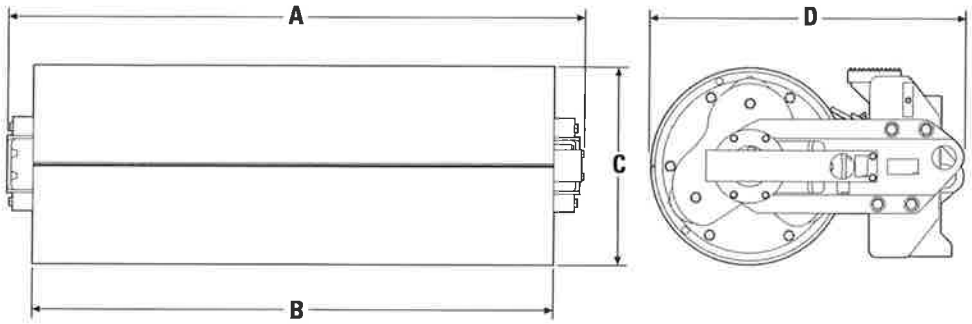

			CV16B		CV18B	
A Overall width	mm	(in)	1854	(73)	2032	(80)
B Drum width	mm	(in)	1676	(66)	1854	(73)
C Height	mm	(in)	634	(25)	634	(25)
D Length	mm	(in)	1009	(40)	1009	(40)
Drum diameter	mm	(in)	634	(25)	634	(25)
Unit weight	kg	(lb)	936	(2,063)	970	(2,138)
Number of motors			1		1	
Motor size	cm^3	(in^3)	28	(1.72)	28	(1.72)
Required hydraulic flow	L/min	(gpm)	42-86	(11-23)	42-86	(11-23)
Optimal hydraulic pressure	bar	(psi)	145-235	(2,100-3,400)	145-235	(2,100-3,400)
Drum oscillation tilt range			± 15°		± 15°	
Drum frequency @ max flow			2946 vibrations/min		2946 vibrations/min	
Dynamic (centrifugal) force	kg	(lb)	5399	(11,903)	5399	(11,903)
Amplitude	mm	(in)	1.16	(0.046)	1.09	(0.043)

B-Series Vibratory Roller

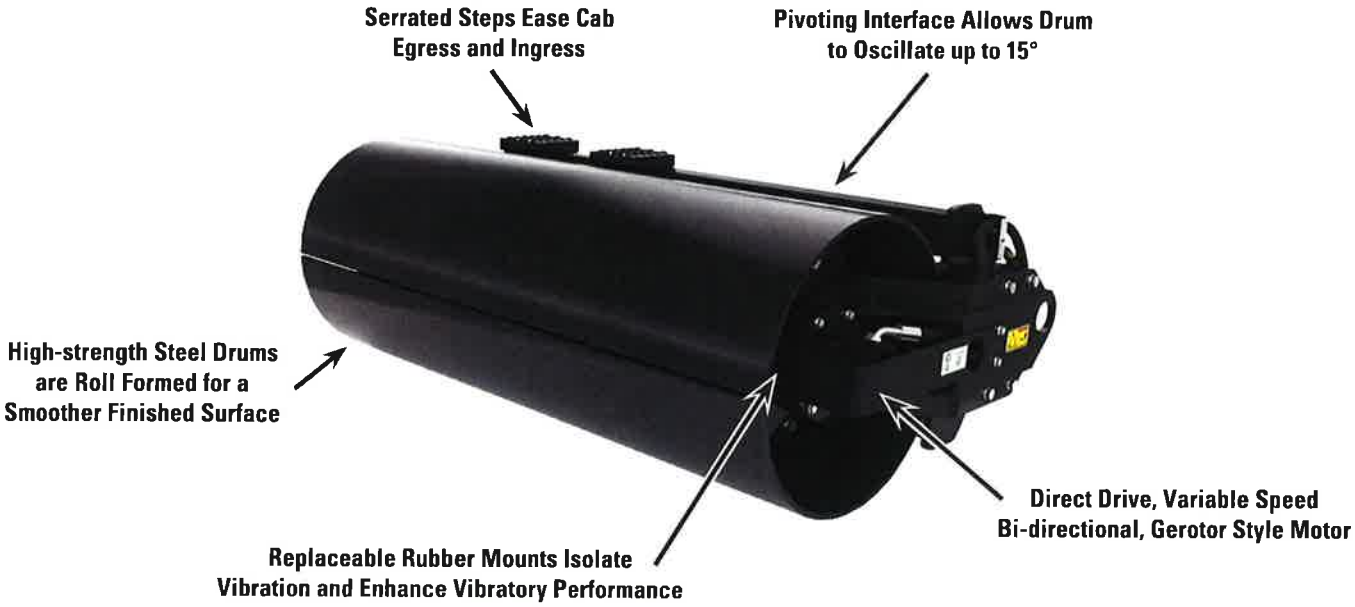

Material Scraper Bar
Spring-loaded dual direction scraper bar prevents material build up.

For more complete information on Cat products, dealer services, and industry solutions, visit us on the web at **www.cat.com**

© 2016 Caterpillar
All rights reserved

Materials and specifications are subject to change without notice. Featured machines in photos may include additional equipment. See your Cat dealer for available options.

CAT, CATERPILLAR, SAFETY.CAT.COM, their respective logos, "Caterpillar Yellow" and the "Power Edge" trade dress, as well as corporate and product identity used herein, are trademarks of Caterpillar and may not be used without permission.

AEHQ5837-03 (09-2016)
Replaces AEHQ5837-02

Cat® Brooms

Skid Steer Loaders
Multi Terrain Loaders
Compact Track Loaders
Compact Wheel Loaders

Cat® Pickup, Angle and Utility Brooms are all available in two sweeping widths, and are used for cleaning and removing dirt, rock, snow and other debris from streets, parking lots, driveways, sidewalks and factory floors in a variety of construction, industrial and landscaping settings. They are also ideal for paving, specialty trades, recycling, demolition and airport maintenance applications.

Pickup Brooms

- Pickup Brooms sweep and deposit material into an integrated hopper bucket for easy removal and dumping. Bi-directional capabilities of the bristles allow Pickup and Utility Brooms to sweep in forward or reverse machine travel. Optimum sweeping style is in forward travel, resulting in over-the-brush pickup. Certain conditions require a dust pan style of sweeping, done in reverse travel.

Utility Brooms

- Utility Brooms sweep and collect light debris on smooth surfaces in forward or reverse travel. They can be adjusted for greater bristle down-force in tough applications such as sweeping course material out of a cold planer cut.

Angle Brooms

- Angle Brooms use a windrowing action to move loose debris ahead and to the side of the surface being swept. They can be oriented straight or angled up to 30° left or right of center in forward travel.

Direct drive motors

- Direct drive motors provide maximum performance and durability. Pickup and Utility Brooms use a single variable speed, bi-directional gerotor style hydraulic motor, contained in a special housing that is adjustable to compensate for bristle wear. Angle brooms use a single variable speed unidirectional gerotor style hydraulic motor.

Polypropylene/wire convoluted brushes

- Polypropylene/wire convoluted brushes provide optimum results for sweeping. Optional all-polypropylene and all-steel wire convoluted brushes are available for specialty applications. Convoluted brush sections are available in half-kits for easy maintenance and quick replacement.

Drop core design

- Drop core design allows for quick bristle replacement without removing hydraulic hoses.

Quick coupler

- Quick coupler is rugged with an opposing edge design that holds the work tool securely and allows the operator to quickly change from one high performance Cat Work Tool to another.

000221

Broom Application Matrix

	Pickup Brooms BP115C, BP118C	Utility Brooms BU115, BU118	Angle Broom BA118C
Sweeping debris from a flat surface	✓	✓	✓
Collecting debris from a surface	✓	✓	
Side casting debris/material from a surface			✓
Sweeping coarse material from a cold planer cut		✓	
Optimum machine travel direction	Forward or Reverse	Forward or Reverse	Forward
Optimum brush/bristle rotation	Bi-directional	Bi-directional	Uni-directional Reverse rotation

Compatibility

Model	Machines
BP115C	216B3, 226B3, 247B3, 236D, 242D, 246D, 257D, 259D, 262D, 272D, 272D XHP, 277D, 279D, 287D, 289D, 297D, 297D XHP, 299D, 299D XHP
BP118C	247B3, 236D, 246D, 257D, 259D, 262D, 272D, 272D XHP, 277D, 279D, 287D, 289D, 297D, 297D XHP, 299D, 299D XHP
BA118C	216B3, 226B3, 247B3, 236D, 242D, 246D, 257D, 259D, 262D, 272D, 272D XHP, 277D, 279D, 287D, 289D, 297D, 297D XHP, 299D, 299D XHP, 906H2, 907H2, 908H2
BU115	216B3, 226B3, 247B3, 236D, 242D, 246D, 257D, 259D, 262D, 272D, 272D XHP, 277D, 279D, 287D, 289D, 297D, 297D XHP, 299D, 299D XHP, 906H2, 907H2, 908H2
BU118	236D, 242D, 246D, 257D, 259D, 262D, 272D, 272D XHP, 277D, 279D, 287D, 289D, 297D, 297D XHP, 299D, 299D XHP, 906H2, 907H2, 908H2

Machine model availability and attachment vary by region. Please contact your local dealer for availability.

Pickup Brooms

Bolt-on cutting edges and sight gauge on hopper hood
- Cat bolt-on cutting edges on hopper bucket increases wear life.

Interior deflectors, rear bucket seal, and side brush
- Interior deflectors, rear bucket seal, and side brush stripping direct dirt and dust into the bucket and reduce spillage and air-borne contaminants.

Large hopper capacity and wide bucket opening
- Large hopper capacity allows greater productivity with longer sweeping cycles before emptying the hopper. Wide bucket opening permits fast, efficient dumping.

Dual chain and loader arm bracket system
- Dual chain and loader arm bracket system holds brush housing horizontally when emptying the hopper.

Heavy-duty low profile pneumatic guide wheel
- Heavy-duty low profile pneumatic guide wheel supports the hood during sweeping.

Optional all-steel wire gutter brush and optional water kit
- Optional all-steel wire gutter brush mounted on left or right side of broom assists in removing material from gutters and pavement edges. Poly bristle brush also available.
- Optional water sprinkler kit is available for dust suppression.

Adjustable volumizer
- Adjustable volumizer feature allows for more material retention in hopper, giving operator more sweeps before stopping to empty material.

Bristle height adjustment
- Bristle height adjustments have been simplified with the use of a handle and tool-less locking feature.

Motor serviceability
- Motor serviceability is enhanced with a handle shaped motor bracket, core connection is close to broom wall and single retention pins allow for quick brush change and less downtime.

Pickup Brooms – Specifications

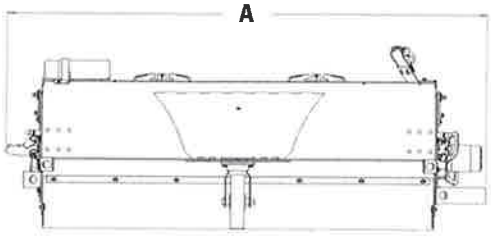

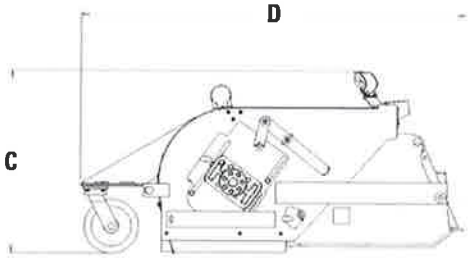

			BP115C		BP118C	
A Overall width	mm	(in)	1990	(78)	2295	(90)
B Sweeping width	mm	(in)	1524	(60)	1829	(72)
C Height	mm	(in)	872	(34)	872	(34)
D Length w/o gutter brush	mm	(in)	1837	(72)	1837	(72)
Unit weight*	kg	(lb)	526	(1,160)	570	(1,258)
Motor displacement	cm^3/rev	(in^3/rev)	405	(25)	405	(25)
Required hydraulic flow range	L/min	(gpm)	42-86	(11-23)	42-86	(11-23)
Optimal hydraulic pressure range	bar	(psi)	145-235	(2,100-3,400)	145-235	(2,100-3,400)
Brush speed (shaft) @ max flow**	rpm		199		199	
Hopper capacity (struck)***	m^3	(yd^3)	0.41	(0.54)	0.49	(0.64)
	m^3	(ft^3)	0.41	(14.6)	0.49	(17.4)
Brush diameter	mm	(in)	660	(26)	660	(26)
Gutter brush weight	kg	(lb)	41	(90)	41	(90)

* Weight without gutter brush option.

** Gutter brush receives 5 gpm maximum flow when installed.

*** Rated struck capacity shown as per ISO 7546:1983 and SAE J742 FEB85.

Utility Brooms

Reinforced high-strength steel and curved hood design
- Reinforced high-strength steel and curved hood design increases durability and protection from front hood impacts. Front-mounted torque tube adds stiffness.

Bi-directional bristle rotation and adjustable locking nut
- Bi-directional bristle rotation allows for dust pan or over-the-brush sweeping of debris. Adjustable locking nut allows brush core to float, reducing bristle wear, or provides positive brush down-force for aggressive sweeping.

Positive brush down-force
- Positive brush down-force allows aggressive sweeping in cuts by rapidly dragging broom backwards and sweeping millings under the brush core and into the bucket.

Large hopper capacity and wide bucket opening
- Large hopper capacity allows greater productivity with longer sweeping cycles before emptying the hopper. Wide bucket opening permits fast, efficient dumping.

Optional bolt-on cutting edge and optional water sprinkler kit
- Optional bolt-on cutting edge extends the life of the hopper in severe applications.
- Optional water sprinkler kit is available for dust suppression.

Rubber boot on front and sides
- Rubber boot on front and sides aids in containing debris and airborne contaminants during sweeping.

Utility Brooms – Specifications

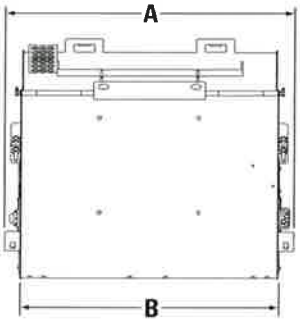

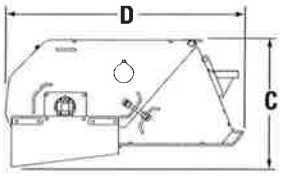

			BU115		BU118	
A Overall width	mm	(in)	1810	(71)	2115	(83)
B Sweeping width	mm	(in)	1510	(59)	1865	(73)
C Height	mm	(in)	793	(31)	793	(31)
D Length	mm	(in)	1490	(59)	1490	(59)
Unit weight	kg	(lb)	422	(930)	481	(1,060)
Motor displacement	cm^3/rev	(in^3/rev)	393	(24)	393	(24)
Required hydraulic flow range	L/min	(gpm)	30-86	(8-23)	30-86	(8-23)
Optimal hydraulic pressure range	bar	(psi)	145-235	(2,100-3,400)	145-235	(2,100-3,400)
Brush speed (shaft) @ max flow	rpm		220		220	
Hopper capacity	m^3	(yd^3)	0.42	(0.55)	0.49	(0.64)
	m^3	(ft^3)	0.42	(14.9)	0.49	(17.4)
Brush diameter	mm	(in)	660	(26)	660	(26)

000225

Angle Brooms

Manual or hydraulic angling
- Manual or hydraulic angling up to 30° right or left of center. Hydraulic angling option allows operator to control broom angle from the operator compartment. Manual angling brooms can be easily converted to hydraulic angling.

Heavy-duty storage stands
- Heavy-duty storage stands allow the broom to be transported and stored without damaging the bristles.
- Pivot design quickly transitions angle broom from storage to sweep mode.

Optional water sprinkler and optional bolt-on hood extension and rubber flap
- Optional water sprinkler kit is available for dust suppression. Optional bolt-on hood extension and rubber flap are available when conditions or regulations require.

Motor serviceability
- Motor serviceability is enhanced with a handle shaped motor bracket, core connection is close to broom wall and single retention pins allow for quick brush change and less downtime.

Brush adjustment chain
- Brush adjustment chain allows for quick broom height adjustment.

Manifold block design
- Manifold block design has 70% less pressure drop, providing more sweeping power.

Angle cylinder
- Angle cylinder improves durability with a large diameter rod and higher pressure rating.

Angle Brooms – Specifications

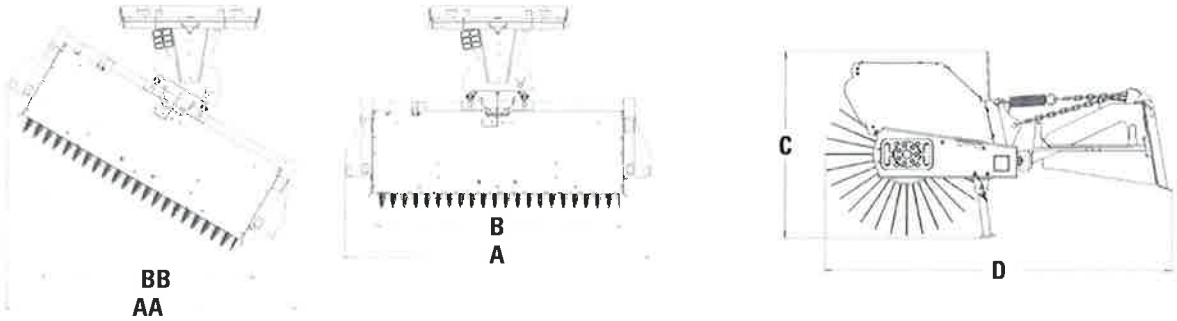

			BA118C	
A Overall width	mm	(in)	2637	(104)
B Sweeping width	mm	(in)	2119	(83)
AA Overall width angled (±30°)	mm	(in)	2508	(99)
BB Sweeping width angled (±30°)	mm	(in)	1849	(73)
C Height	mm	(in)	918	(36)
D Length	mm	(in)	1741	(69)
Unit weight	kg	(lb)	401	(885)
Motor displacement	cm^3/rev	(in^3/rev)	405	(25)
Required hydraulic flow range	L/min	(gpm)	42-86	(11-23)
Optimal hydraulic pressure range	bar	(psi)	145-235	(2,100-3,400)
Brush speed (shaft) @ max flow	rpm		199	
Brush diameter	mm	(in)	815	(32)
Hood extension weight	kg	(lb)	18	(40)

Cat Replacement Brushes

A clean work site offers more than just aesthetic value. Removing debris results in both improved productivity and a safer working environment. Caterpillar offers a full line of replacement brushes, including polypropylene brushes and solid steel wire brushes for the most versatility in a broad range of applications to meet your specific needs.

Convoluted Poly and Wire Brush Design for BP115C, BP118C and BA118C

- Convoluted wire and poly brush hubs have three high points and three low points on their hubs. As one brush high point meets the adjoining brush high point, the brushes space themselves out. This design creates a side-to-side sweeping path, forming open pockets between brushes to pick up large debris.

Brush Materials

- All polypropylene bristle brushes offer excellent wear resistance, provide more lift action and are for use on natural and artificial turf, including snow.
- All steel wire bristle brushes are for use on compacted materials, ensure an aggressive sweeping and cutting action and lose sweeping efficiency with excessive down pressure.

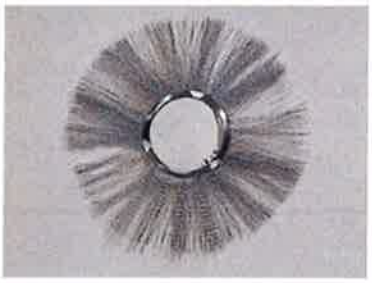

Operating Tips

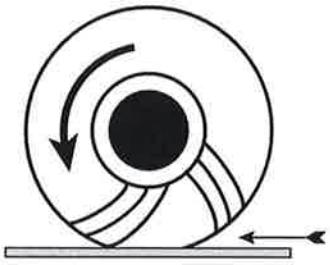

Too Much Pressure – causes mop action

Incorrect

Proper Down Pressure for Pickup and Angle Brooms

Effective sweeping uses the tip of the bristles to flick debris off the surface. Proper down pressure will result in brush wear at the tip. If the brush bristle is pushed down too far, it drags across the surface on its side and wears more quickly on a long angle. Excessive downward pressure can decrease brush life by up to 95% and limit sweeping effectiveness.

To check for proper down pressure, rotate the broom at normal operating speed on the ground while the machine is stationary. After lifting the broom off the ground, measure the brush pattern on the ground. It should be between 55-110 mm (2-4 in) wide. If it is wider than 110 mm (4 in), you are exerting too much down pressure.

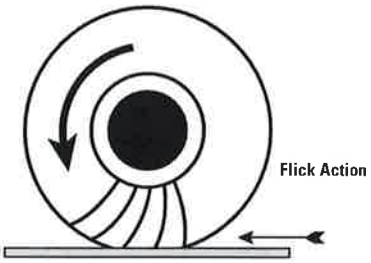

Proper Pressure – sweeping with the tips

Correct

Operating Tips for Angle Brooms

- **For dirt and gravel** – If possible, keep the wind at your back so it follows the angle of the broom. Low broom speed and moderate ground speed are the best choices when sweeping hard surfaces. High broom speeds create excessive dust.
- **For heavy debris** – If debris is larger than 55 mm (2 in) in diameter, use a high broom speed. Ground speed should not exceed 8 km/h (5 mph).
- **For snow** – Set the engine speed at three-fourths of high idle. Use the speed direction control to move the machine at a slow ground speed. For wet or deep snow, increase engine speed to high idle so snow does not build up in the broom frame.
- **For thatch** – Bristle tips should barely touch the grass to avoid pulling the broom into the ground. If the broom begins to pull into the ground or stall, raise the broom instead of increasing engine speed. Low broom and ground speeds generally work best for thatching jobs.

Brush Wear Life

In general, sweeping effectiveness decreases as the brush diameter is reduced.

- **Pickup Brooms and Utility Brooms** – The brush diameter can wear down until there is no further downward adjustment of the broom. That will result in approximately 110 mm (4 in) of bristle length remaining. From a practical perspective, the brush begins to lose its effectiveness as soon as the diameter is decreased. Shorter bristle length means there is less ability to flick debris into the collection hopper.
- **Angle Brooms** – There is no caster to limit downward broom travel of the brush as it wears. At the end of the adjustment range, the tilt function of the arms can be rotated to allow further bristle wear. As with Cat pickup brooms and utility brooms, shorter bristles are less effective in flicking debris.

For more complete information on Cat products, dealer services, and industry solutions, visit us on the web at www.cat.com

© 2015 Caterpillar
All Rights Reserved
Printed in U.S.A.

Materials and specifications are subject to change without notice. Featured machines in photos may include additional equipment. See your Cat dealer for available options.

CAT, CATERPILLAR, SAFETY.CAT.COM, their respective logos, "Caterpillar Yellow" and the "Power Edge" trade dress, as well as corporate and product identity used herein, are trademarks of Caterpillar and may not be used without permission.

AEHQ5846-03 (02-15)
Replaces AEHQ5846-02

Minute Book Text Detail
Book 0216 Page 228 RECESS
Date 4/ 5/2021

ORDER TO RECESS

Upon motion made by Malcolm Perry and seconded by Hudson Holliday, the following order was adopted, to-wit:

Be It Ordered to direct County Administrator to post a notice of this recess meeting within one hour after such meeting is called in a prominent place available to examination and inspections by the general public at the Board of Supervisor's meeting room in the Pearl River County Courthouse Complex and make attached notice as part of minutes.

Be It Further Ordered that this Board does now take a recess until the next scheduled meeting to be held at 9:00 a.m., Wednesday, the 21st day of April, 2021, at the Board of Supervisor's meeting room in the Pearl River County Courthouse Complex in the City of Poplarville.

Ordered and adopted, this the 5th day of April, 2021.

Voting AYE: Donald Hart, Malcolm Perry, Hudson Holliday, Jason Spence, and Sandy Kane Smith
Voting NAY: None

PRESIDENT

CLERK OF THE BOARD

SANDY KANE SMITH
President, District Five
MALCOLM PERRY
Vice-President, District Two
DONALD HART
District One

PEARL RIVER COUNTY
MISSISSIPPI
Est. 1890

HUDSON HOLLIDAY
District Three
JASON SPENCER
District Four
MELINDA BOWMAN
Clerk of Board

000229

BOARD OF SUPERVISORS
PEARL RIVER COUNTY
P.O. BOX 569
POPLARVILLE, MS 39470
(601) 403-2300
(601) 403-2309 Fax
ADRAIN LUMPKIN, JR.
County Administrator

NOTICE OF SUPERVISOR'S MEETING

You are hereby notified
Pursuant to
THE MISSISSIPPI OPEN MEETINGS LAW
that the next meeting of the
Board of Supervisors of Pearl River County, Mississippi,
will be held on April 21, 2021 at 9:00 o'clock a.m.
in the Board of Supervisors Meeting Room
in the Board Room Building
at the Courthouse in Poplarville, Pearl River County, Mississippi

BOARD OF SUPERVISORS
PEARL RIVER COUNTY, MISSISSIPPI

By: _____
Adrain Lumpkin, Jr., County Administrator